FIL-TREK CORPORATION
55 Stafford Court
Cambridge, ON N1T 1B3
P (519) 623-7448
F (519) 623-8807

Duplex Basket Strainers

93 Series

- Carbon or Stainless Steel
- ASME Code ("U" or "UM")/Non-Code
- Sizes from 2" to 36"

Fabricated duplex basket strainers are used in applications where fluid flow cannot be interrupted when baskets need to be removed for maintenance and/or cleaning.

SUITABLE USES

Air & Gas · Desalination · Coolant · Water · Electronics · Coatings
Oil & Gas · Chemical · Pulp & Paper · Power · Marine · Equipment

RATINGS	▪ ASME Class 150 ▪ ASME Class 300 ▪ ASME Class 600	▪ ASME Class 900 ▪ ASME Class 1500 ▪ ASME Class 2500
DESIGN PRESSURE	Up to 3700 @ 800° F (427° C)	
AVAILABLE MATERIALS	Carbon or Stainless Steel 304 or 316, C276, AL6XN, 2205, 2507 & Monel 400, Titanium and other materials.	
ADDITIONAL FEATURES	Swing bolt or thru-bolt closures available Domed bottom and flat bottom configurations Four idividually operated isolation valves are used to isolate flow.	

Custom sizes, configurations, materials of construction and other options may be available. Please contact Fil-Trek

For more information, e-mail: info@fil-trek.com or visit Fil-Trek.com

93BS_DS0625

Duplex Basket Strainers

93 Series | Fabricated Duplex Basket Strainers

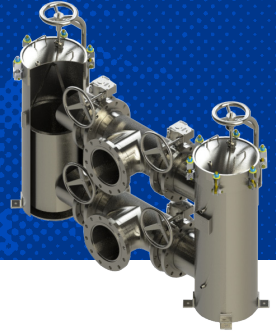

STRAINER SPECIFICATIONS

Series /Style Configuration Options	A - Flat bottom w/ swing bolt closure B - Flat bottom w/ ANSI thru bolt closure C - Domed bottom w/ swing bolt closure D - Domed bottom w/ ANSI thru bolt closure
Duplex Connection Options	D1 - Offset compact style D2 - Inline manifold style D3 - Inline elbow style 1 D4 - Inline elbow style 2 D5 - Inline Short
Cover	Flat cover for 10" and smaller Domed cover for 12" and larger *Cover lifting lug standard on all strainers 10' and larger*
Basket Options	Two (2) single baskets (std) *Multi-basket configuration available based on sizing*
Valve Options	150# and 300# butterfly valves (lever standard for 8" or less, gears standard 10" and larger) *For higher pressures, other options available.*
Inlet/Outlet	2" TO 36" *Larger sizes available, contact Fil-Trek*
Vent	1/2"*

PRESSURE & TEMPERATURE DESIGNATION

DESIGNATION	MOC	PSI	TEMP (°F)	ANSI RATING
PT1	CS	280	100	ANSI 150
	SS304/SS316	270		
PT2	CS	195	400	ANSI 150
	SS304/SS316	185		
PT3	CS	735	100	ANSI 300
	SS304/SS316	715		
PT4	CS	630	400	ANSI 300
	SS304/SS316	490		
PT5	CS	1475	100	ANSI 600
	SS304/SS316	1435		
PT6	CS	1260	400	ANSI 600
	SS304/SS316	990		
PT7	CS	2215	100	ANSI 900
	SS304/SS316	2155		
PT8	CS	1895	400	ANSI 900
	SS304/SS316	1485		
PT9	CS	3700	100	ANSI 1500
	SS304/SS316	3595		
PT10	CS	3165	400	ANSI 1500
	SS304/SS316	2480		
PT11	CS	6165	100	ANSI 2500
	SS304/SS316	5995		
PT12	CS	5275	400	ANSI 2500
	SS304/SS316	4130		

**Table above based on ANSI flange ratings. Fil-Trek will design based on application pressure and temperature requirements.*
***Max temperature may be limited to gasket material.*

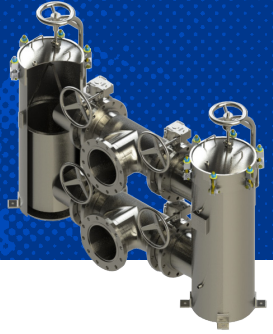

DUPLEX CONFIGURATION OPTIONS

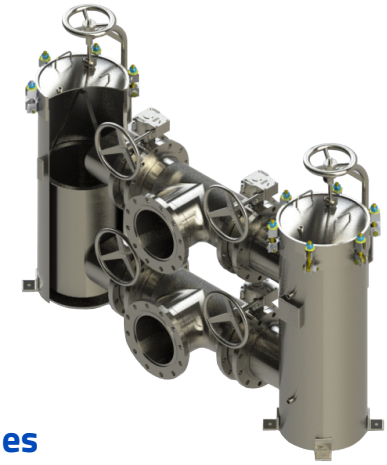

D1 Series

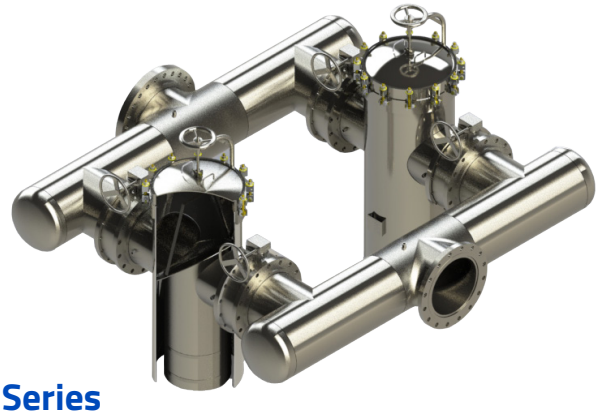

D2 Series

D3 Series

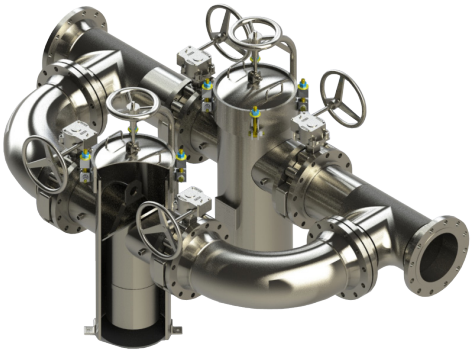

D4 Series

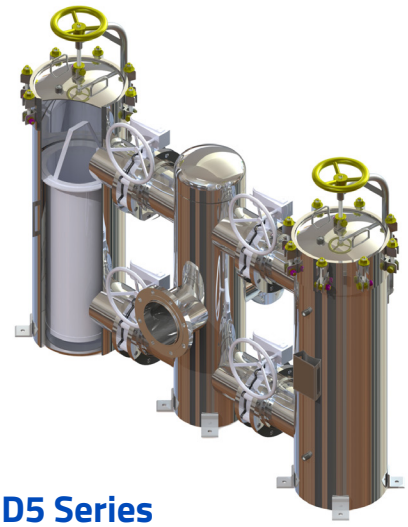

D5 Series

Duplex Basket Strainers

93 Series | Fabricated Duplex Basket Strainers

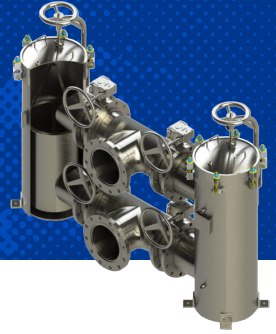

STRAINER OPTIONS

*Indicates standard configuration

Duplex Configuration Options	**D1 - Offset compact style*** D2 - Inline manifold style D3 - Inline elbow style 1 D4 - Inline elbow style 2 D5 - Inline Short
Series /Style Configuration Options	**A** - Flat bottom w/ Swing-bolt closure **B** - Flat bottom w/ ANSI thru-bolt closure **C** - Domed bottom w/ swing bolt closure **D** - Domed bottom w/ ANSI thru bolt closure *See page 14 for other closure/cover options*
Connection Options**	**F - Raised Face Flange*** BW – Butt Weld (Sch 10 to 160) *Other options available, contact factory*
Valve Options	**V2 - Butterfly Valves*** V1 - Ball Valves V3 - 3 Way Ball Valves V4 - 2 Way Plug Valves V5 - 6 Way Transfer Valves V6 - Gate Valves *Other options available, contact factory*

Basket/Mesh Options *(See Screen Openings chart for more options)*	PERF OPTIONS	MESH OPTIONS
	1/8"*	10
	3/16"	20
	1/4"	30
	3/8"	40
	1/2"	50
	5/8"	60
	3/4"	80
	7/8"	100
	1"	120
O-Ring/Gasket Options	**For 93A/93C**	**For 93B/93D**
	BN - Buna-N*	Spiral Wound
	EP - EPDM	Flexitallic*
	VI - Viton	Garlon
	SI – Silicone	Vegetable Fibre
	TEV – Teflon enc. Viton	
	Other materials available, contact factory	
Leg Options	**Leg tabs*** (std for flat bottom) **No legs*** (std for domed bottom) ***Other Available Options:*** Angle Iron Legs Skirt	

PRODUCT NOMENCLATURE

S6	93	D1	A	10	6F	PT2	V2	-
MOC	**MODEL**	**DUPLEX CONFIG.**	**UNIT CONFIG.**	**BODY DIAMETER**	**INLET/OUTLET CONNECTION**	**DESIGN PRESSURE**	**VALVE OPTIONS**	**OPTIONS**
Blank - CS S4 - SS304 S6 - SS316	**93 Series**	See **Duplex Config.** options above	See **Style Config** options above	See tables on following pages for body diameter and inlet/outlet size	See **Connection Options** above	See **Pressure & Temperature Designation** table	See **Valve Options**	See "Strainer Options" above for: **Finish** options **Basket Perf/Mesh** options **O-Ring/Gasket** options **Cover/Headlift** Options **Leg** options

Duplex Basket Strainers

93 Series | Fabricated Duplex Basket Strainers

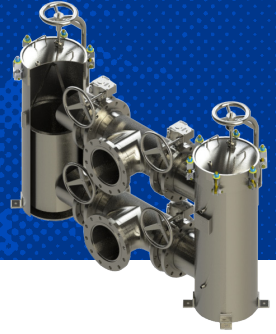

D1 MODEL | DIMENSIONAL DETAILS

93A Series (Flat Bottom w/ Swing Bolt) | 150#/300#

INLET/ OUTLET	BODY DIA.	A	B	C	D	E	F	WT LBS
2"	6.625"	18"	6"	8"	23"	26"	44"	230
3"	8.625"	21"	6"	8"	28"	31"	44"	250
4"	8.625"	21"	6"	8"	28"	31"	44"	400
6"	10.750"	26"	8"	10"	32"	38"	48"	650
8"	12.500"	36"	10"	12"	43"	50"	64"	1350
10"	16.500"	36"	10"	16"	47"	62"	72"	1800
12"	18.500"	42"	12"	18"	54"	70"	79"	2700
14"	20.500"	52"	14"	22"	67"	86"	94"	3950
16"	24.500"	52"	14"	22"	67"	86"	94"	5250
18"	24.500"	56"	16"	24"	73"	92"	112"	5850
20"	30.500"	64"	18"	28"	85"	106"	124"	7950
24"	36.625"	68"	20"	30"	91"	112"	128"	8950

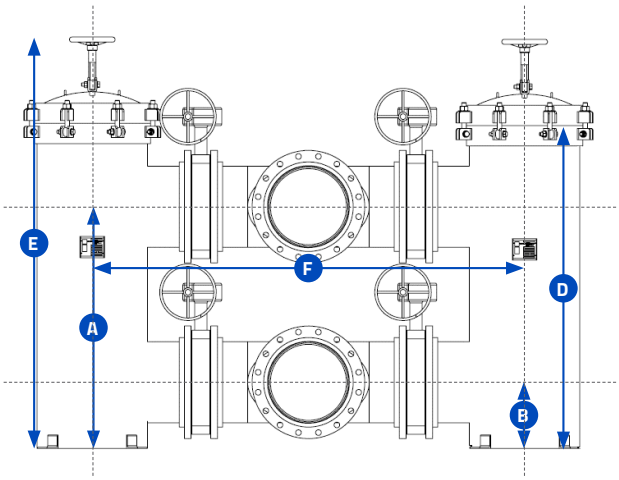

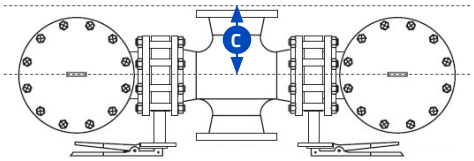

93C Series (Domed Bottom w/ Swing Bolt) | 150#/300#

INLET/ OUTLET	BODY DIA.	A	B	C	D	E	F	WT LBS
2"	6.625"	18"	11"	8"	28"	31"	44"	280
3"	8.625"	21"	11"	8"	33"	36"	44"	300
4"	8.625"	21"	11"	8"	33"	36"	44"	450
6"	10.750"	26"	14"	10"	38"	44"	48"	700
8"	12.500"	36"	16"	12"	49"	56"	64"	1400
10"	16.500"	36"	18"	16"	55"	70"	72"	1850
12"	18.500"	42"	20"	18"	62"	78"	79"	2750
14"	20.500"	52"	24"	22"	77"	96"	94"	4000
16"	24.500"	52"	24"	22"	77"	96"	94"	5300
18"	24.500"	56"	26"	24"	83"	102"	112"	5900
20"	30.500"	64"	29"	28"	96"	117"	124"	8000
24"	36.625"	68"	33"	30"	104"	125"	128"	9000

Available in sizes larger than 24". For 600# and above, please contact Fil-Trek. Specifications listed above are for reference only. All quotes are complete with certified drawing which indicate accurate dimensions and weight.

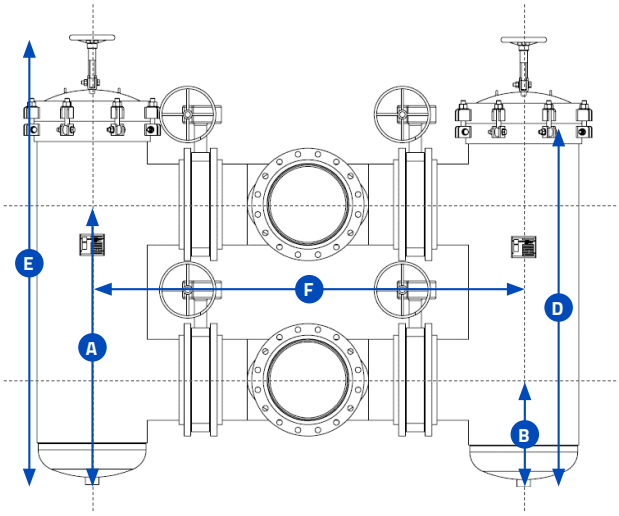

CHART LEGEND

A	Floor to Inlet	**D**	Floor to Seal
B	Floor to Outlet	**E**	Overall Height
C	Center to Face	**F**	Center to Center

FIL-TREK

55 Stafford Court, Cambridge, ON N1T 1B3 **P** (519) 623-7448 **F** (519) 623-8807

For more information, e-mail: info@fil-trek.com or visit Fil-Trek.com

Duplex Basket Strainers

93 Series | Fabricated Duplex Basket Strainers

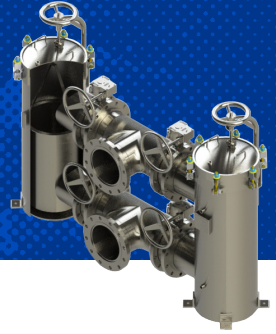

D1 MODEL | DIMENSIONAL DETAILS

93B Series (Flat Bottom w/ Thru Bolt) | 150#/300#

INLET/ OUTLET	BODY DIA.	A	B	C	D	E	F	WT LBS
2"	6.625"	18"	6"	8"	23"	26"	44"	180
3"	8.625"	21"	6"	8"	28"	31"	44"	200
4"	8.625"	21"	6"	8"	28"	31"	44"	350
6"	10.750"	26"	8"	10"	32"	38"	48"	600
8"	12.500"	36"	10"	12"	43"	38"	64"	1300
10"	16.500"	36"	10"	16"	47"	44"	72"	1750
12"	18.500"	42"	12"	18"	54"	70"	79"	2650
14"	20.500"	52"	14"	22"	67"	45"	94"	3900
16"	24.500"	52"	14"	22"	67"	49"	94"	5200
18"	24.500"	56"	16"	24"	73"	50"	112"	5800
20"	30.500"	64"	18"	28"	85"	103"	124"	7900
24"	36.625"	68"	20"	30"	91"	110"	128"	8900

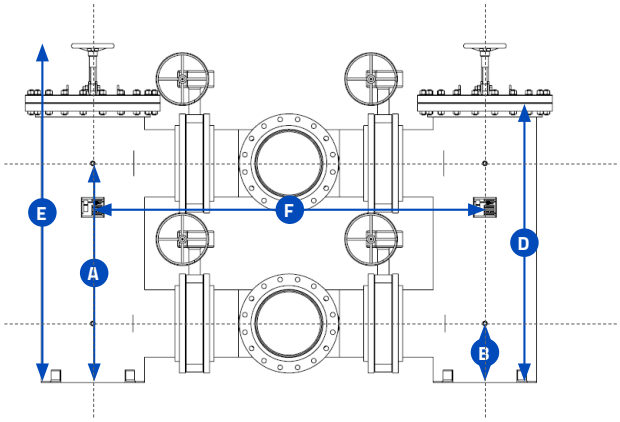

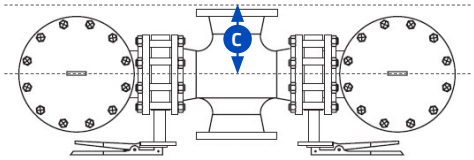

93D Series (Domed Bottom w/ Thru Bolt) | 150#/300#

INLET/ OUTLET	BODY DIA.	A	B	C	D	E	F	WT LBS
2"	6.625"	18"	11"	8"	28"	31"	44"	230
3"	8.625"	21"	11"	8"	33"	36"	44"	250
4"	8.625"	21"	11"	8"	33"	36"	44"	400
6"	10.750"	26"	14"	10"	38"	44"	48"	650
8"	12.500"	36"	16"	12"	49"	44"	64"	1350
10"	16.500"	36"	18"	16"	55"	52"	72"	1800
12"	18.500"	42"	20"	18"	62"	78"	79"	2700
14"	20.500"	52"	24"	22"	77"	55"	94"	3950
16"	24.500"	52"	24"	22"	77"	59"	94"	5250
18"	24.500"	56"	26"	24"	83"	60"	112"	5850
20"	30.500"	64"	29"	28"	96"	114"	124"	7950
24"	36.625"	68"	33"	30"	104"	123"	128"	8950

Available in sizes larger than 24'. For 600# and above, please contact Fil-Trek. Specifications listed above are for reference only. All quotes are complete with certified drawing which indicate accurate dimensions and weight.

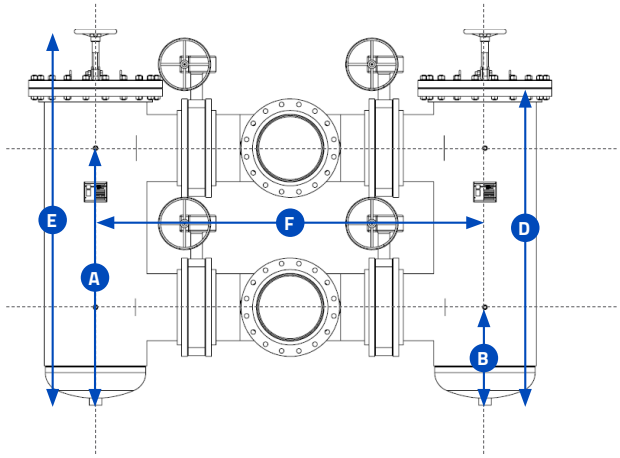

CHART LEGEND

A	Floor to Inlet	**D**	Floor to Seal
B	Floor to Outlet	**E**	Overall Height
C	Center to Face	**F**	Center to Center

FIL-TREK

55 Stafford Court, Cambridge, ON N1T 1B3 **P** (519) 623-7448 **F** (519) 623-8807

For more information, e-mail: info@fil-trek.com or visit Fil-Trek.com

Duplex Basket Strainers

93 Series | Fabricated Duplex Basket Strainers

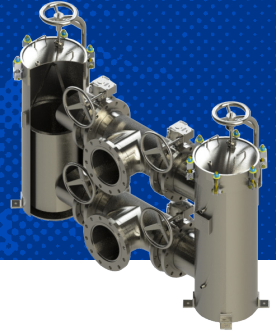

D2 MODEL | DIMENSIONAL DETAILS

93A Series (Flat Bottom w/ Swing Bolt) | 150#/300#

INLET/ OUTLET	BODY DIA.	A	B	C	D	E	F	WT LBS
2"	6.625"	40"	13"	36"	10"	12"	14"	250
3"	8.625"	46"	13"	40"	10"	14"	14"	450
4"	8.625"	52"	14"	45"	10"	16"	18"	600
6"	10.750"	58"	14"	45"	10"	20"	20"	800
8"	12.500"	62"	15"	50"	10"	24"	26"	1150
10"	16.500"	68"	20"	62"	12"	30"	28"	2000
12"	18.500"	74"	25"	78"	16"	32"	30"	3200
14"	20.500"	80"	30"	94"	18"	36"	36"	4400
16"	24.500"	86"	35"	118"	20"	40"	38"	4900
18"	24.500"	90"	40"	122"	22"	44"	40"	5300
20"	30.500"	96"	45"	130"	24"	48"	44"	6000
24"	36.625"	102"	50"	140"	26"	52"	50"	6800

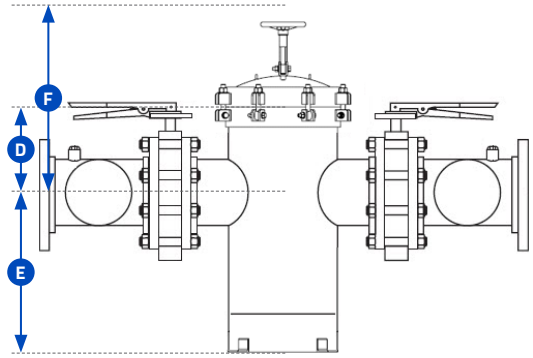

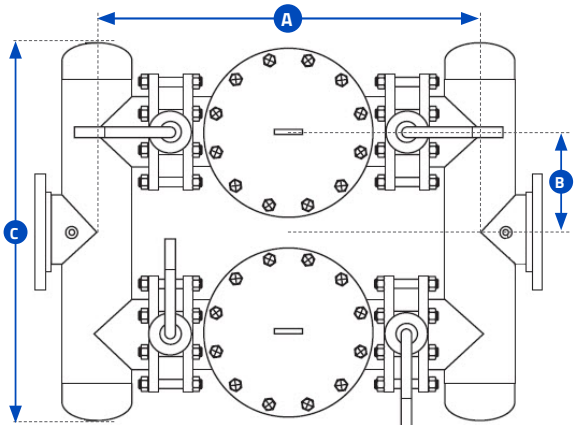

93C Series (Domed Bottom w/ Swing Bolt) | 150#/300#

INLET/ OUTLET	BODY DIA.	A	B	C	D	E	F	WT LBS
2"	6.625"	40"	13"	36"	10"	17"	14"	300
3"	8.625"	46"	13"	40"	10"	19"	14"	500
4"	8.625"	52"	14"	45"	10"	21"	18"	650
6"	10.750"	58"	14"	45"	10"	25"	20"	850
8"	12.500"	62"	15"	50"	10"	29"	26"	1200
10"	16.500"	68"	20"	62"	12"	36"	28"	2050
12"	18.500"	74"	25"	78"	16"	38"	30"	3250
14"	20.500"	80"	30"	94"	18"	43"	36"	4500
16"	24.500"	86"	35"	118"	20"	49"	38"	4950
18"	24.500"	90"	40"	122"	22"	53"	40"	5350
20"	30.500"	96"	45"	130"	24"	57"	44"	6050
24"	36.625"	102"	50"	140"	26"	63"	50"	6850

Available in sizes larger than 24". For 600# and above, please contact Fil-Trek. Specifications listed above are for reference only. All quotes are complete with certified drawing which indicate accurate dimensions and weight.

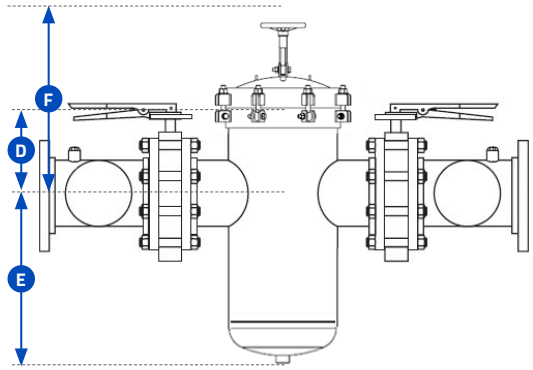

CHART LEGEND

A	Overall Width	**D**	Flange to Lid
B	Center to Flange	**E**	Floor to Inlet/Outlet
C	Overall Depth	**F**	Cover Clearance Height

FIL-TREK

55 Stafford Court, Cambridge, ON N1T 1B3 **P** (519) 623-7448 **F** (519) 623-8807

For more information, e-mail: info@fil-trek.com or visit Fil-Trek.com

Duplex Basket Strainers

93 Series | Fabricated Duplex Basket Strainers

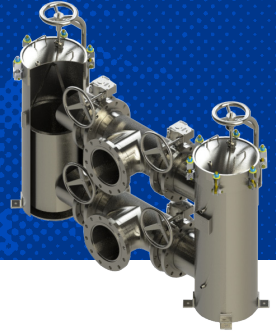

D2 MODEL | DIMENSIONAL DETAILS

93B Series (Flat Bottom w/ Thru Bolt) | 150#/300#

INLET/ OUTLET	BODY DIA.	A	B	C	D	E	F	WT LBS
2"	6.625"	40"	13"	36"	8"	12"	10"	200
3"	8.625"	46"	13"	40"	8"	14"	10"	400
4"	8.625"	52"	14"	45"	8"	16"	10"	550
6"	10.750"	58"	14"	45"	8"	20"	10"	750
8"	12.500"	62"	15"	50"	8"	24"	10"	1100
10"	16.500"	68"	20"	62"	10"	30"	12"	1950
12"	18.500"	74"	25"	78"	14"	32"	16"	3150
14"	20.500"	80"	30"	94"	16"	36"	20"	4300
16"	24.500"	86"	35"	118"	22"	40"	24"	4800
18"	24.500"	90"	40"	122"	24"	44"	28"	5200
20"	30.500"	96"	45"	130"	26"	48"	32"	5900
24"	36.625"	102"	50"	140"	28"	52"	38"	6700

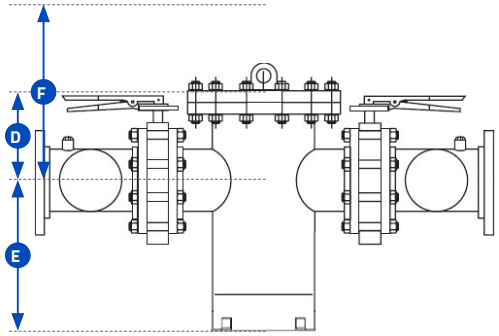

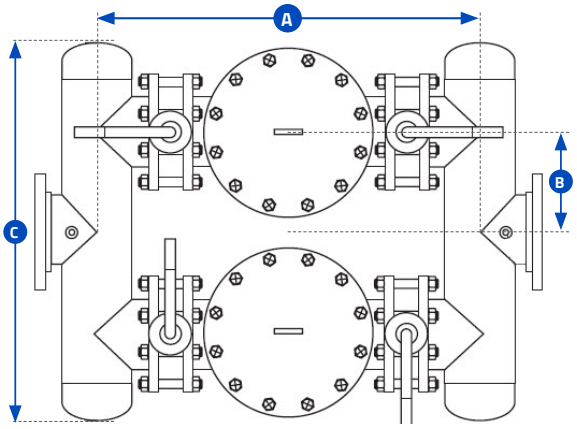

93D Series (Domed Bottom w/ Thru Bolt) | 150#/300#

INLET/ OUTLET	BODY DIA.	A	B	C	D	E	F	WT LBS
2"	6.625"	40"	13"	36"	8"	17"	10"	250
3"	8.625"	46"	13"	40"	8"	19"	10"	450
4"	8.625"	52"	14"	45"	8"	21"	10"	600
6"	10.750"	58"	14"	45"	8"	25"	10"	800
8"	12.500"	62"	15"	50"	8"	29"	10"	1150
10"	16.500"	68"	20"	62"	10"	36"	12"	2000
12"	18.500"	74"	25"	78"	14"	38"	16"	3200
14"	20.500"	80"	30"	94"	16"	43"	20"	4400
16"	24.500"	86"	35"	118"	22"	49"	24"	4900
18"	24.500"	90"	40"	122"	24"	53"	28"	5300
20"	30.500"	96"	45"	130"	26"	57"	32"	6000
24"	36.625"	102"	50"	140"	28"	63"	38"	6800

Available in sizes larger than 24'. For 600# and above, please contact Fil-Trek. Specifications listed above are for reference only. All quotes are complete with certified drawing which indicate accurate dimensions and weight.

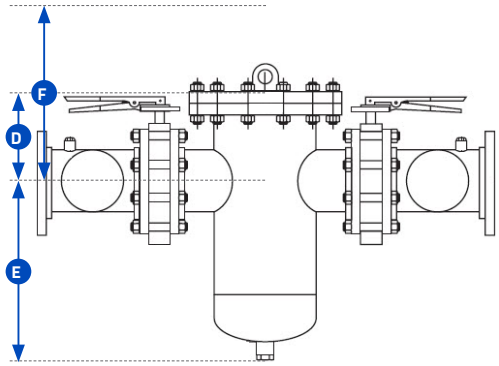

CHART LEGEND

A	Overall Width	**D**	Flange to Lid
B	Center to Flange	**E**	Floor to Inlet/Outlet
C	Overall Depth	**F**	Cover Clearance Height

FIL-TREK

55 Stafford Court, Cambridge, ON N1T 1B3 **P** (519) 623-7448 **F** (519) 623-8807

For more information, e-mail: info@fil-trek.com or visit Fil-Trek.com

Duplex Basket Strainers

93 Series | Fabricated Duplex Basket Strainers

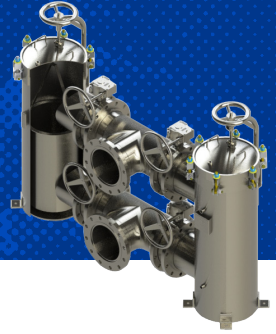

D3 MODEL | DIMENSIONAL DETAILS

93A Series (Flat Bottom w/ Swing Bolt) | 150#/300#

INLET/ OUTLET	BODY DIA.	A	B	C	D	E	F	WT LBS
2"	6.625"	60"	16"	42"	8"	11"	9"	150
3"	8.625"	65"	16"	44"	9"	14"	11"	250
4"	8.625"	72"	18"	46"	9"	14"	11"	300
6"	10.750"	78"	18"	48"	11"	16"	13"	450
8"	12.500"	86"	20"	52"	16"	22"	27"	750
10"	16.500"	100"	24"	60"	15"	26"	27"	850
12"	18.500"	110"	24"	68"	18"	28"	33"	1300
14"	20.500"	120"	25"	72"	21"	31"	34"	2000
16"	24.500"	135"	30"	80"	25"	40"	37"	2200
18"	24.500"	145"	34"	94"	27"	42"	40"	2800
20"	30.500"	160"	38"	120"	29"	44"	42"	3200
24"	36.625"	170"	41"	144"	42"	44"	50"	4000

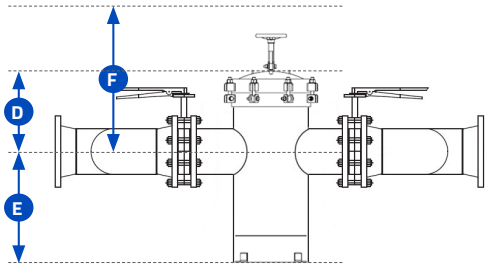

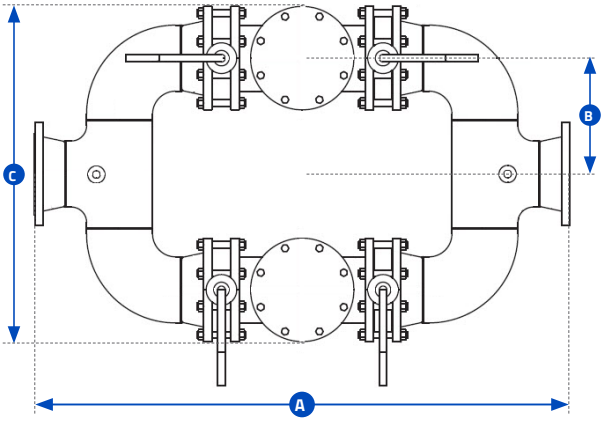

93C Series (Domed Bottom w/ Swing Bolt) | 150#/300#

INLET/ OUTLET	BODY DIA.	A	B	C	D	E	F	WT LBS
2"	6.625"	60"	16"	42"	8"	16"	9"	200
3"	8.625"	65"	16"	44"	9"	19"	11"	300
4"	8.625"	72"	18"	46"	9"	19"	11"	350
6"	10.750"	78"	18"	48"	11"	21"	13"	500
8"	12.500"	86"	20"	52"	16"	27"	27"	800
10"	16.500"	100"	24"	60"	15"	32"	27"	900
12"	18.500"	110"	24"	68"	18"	34"	33"	1350
14"	20.500"	120"	25"	72"	21"	38"	34"	2100
16"	24.500"	135"	30"	80"	25"	49"	37"	2300
18"	24.500"	145"	34"	94"	27"	51"	40"	2900
20"	30.500"	160"	38"	120"	29"	53"	42"	3300
24"	36.625"	170"	41"	144"	42"	55"	50"	4100

Available in sizes larger than 24". For 600# and above, please contact Fil-Trek. Specifications listed above are for reference only. All quotes are complete with certified drawing which indicate accurate dimensions and weight.

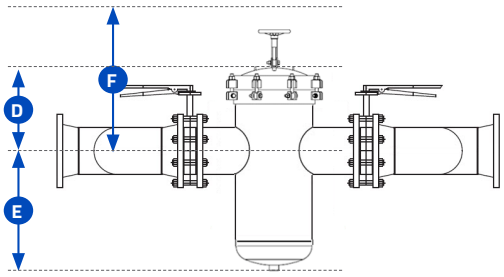

CHART LEGEND

A	Overall Width	**D**	Flange to Lid
B	Center to Flange	**E**	Floor to Inlet/Outlet
C	Overall Depth	**F**	Cover Clearance Height

FIL-TREK

55 Stafford Court, Cambridge, ON N1T 1B3 **P** (519) 623-7448 **F** (519) 623-8807

For more information, e-mail: info@fil-trek.com or visit Fil-Trek.com

Duplex Basket Strainers

93 Series | Fabricated Duplex Basket Strainers

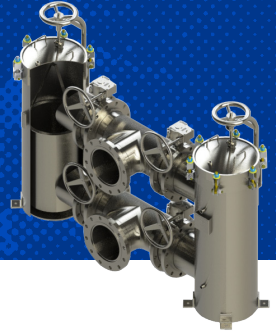

D3 MODEL | DIMENSIONAL DETAILS

93B Series (Flat Bottom w/ Thru Bolt) | 150#/300#

INLET/ OUTLET	BODY DIA.	A	B	C	D	E	F	WT LBS
2"	6.625"	60"	16"	42"	6"	11"	10"	100
3"	8.625"	65"	16"	44"	7"	14"	11"	200
4"	8.625"	72"	18"	46"	7"	14"	11"	250
6"	10.750"	78"	18"	48"	9"	16"	13"	400
8"	12.500"	86"	20"	52"	14"	22"	18"	700
10"	16.500"	100"	24"	60"	13"	26"	18"	800
12"	18.500"	110"	24"	68"	16"	28"	20"	1250
14"	20.500"	120"	25"	72"	19"	31"	23"	1900
16"	24.500"	135"	30"	80"	23"	40"	27"	2100
18"	24.500"	145"	34"	94"	25"	42"	29"	2700
20"	30.500"	160"	38"	120"	27"	44"	31"	3100
24"	36.625"	170"	41"	144"	34"	44"	38"	3900

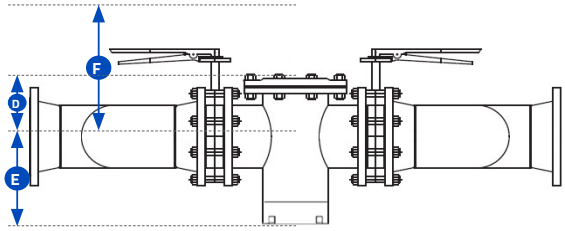

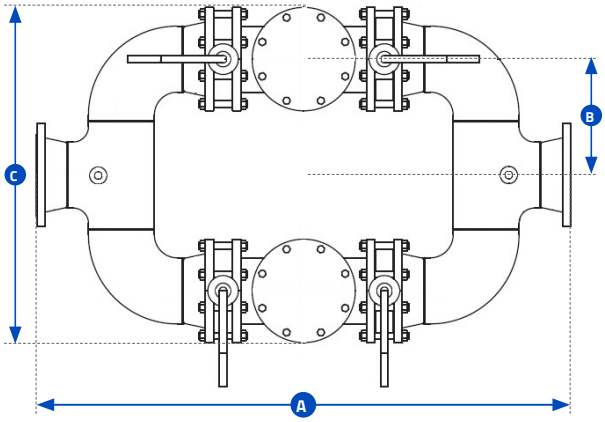

93D Series (Domed Bottom w/ Thru Bolt) | 150#/300#

INLET/ OUTLET	BODY DIA.	A	B	C	D	E	F	WT LBS
2"	6.625"	60"	16"	42"	6"	16"	10"	150
3"	8.625"	65"	16"	44"	7"	19"	11"	250
4"	8.625"	72"	18"	46"	7"	19"	11"	300
6"	10.750"	78"	18"	48"	9"	21"	13"	450
8"	12.500"	86"	20"	52"	14"	27"	18"	750
10"	16.500"	100"	24"	60"	13"	32"	18"	850
12"	18.500"	110"	24"	68"	16"	34"	20"	1300
14"	20.500"	120"	25"	72"	19"	38"	23"	2000
16"	24.500"	135"	30"	80"	23"	49"	27"	2200
18"	24.500"	145"	34"	94"	25"	51"	29"	2800
20"	30.500"	160"	38"	120"	27"	53"	31"	3200
24"	36.625"	170"	41"	144"	34"	55"	38"	4000

Available in sizes larger than 24'. For 600# and above, please contact Fil-Trek. Specifications listed above are for reference only. All quotes are complete with certified drawing which indicate accurate dimensions and weight.

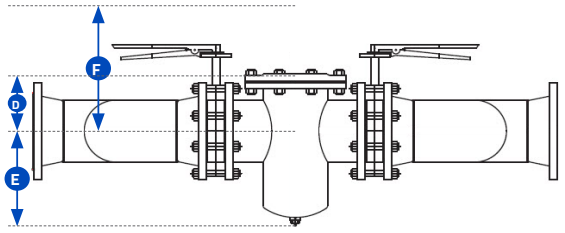

CHART LEGEND

A	Overall Width	**D**	Flange to Lid
B	Center to Flange	**E**	Floor to Inlet/Outlet
C	Overall Depth	**F**	Cover Clearance Height

FIL-TREK

55 Stafford Court, Cambridge, ON N1T 1B3 **P** (519) 623-7448 **F** (519) 623-8807

For more information, e-mail: info@fil-trek.com or visit Fil-Trek.com

Duplex Basket Strainers

93 Series | Fabricated Duplex Basket Strainers

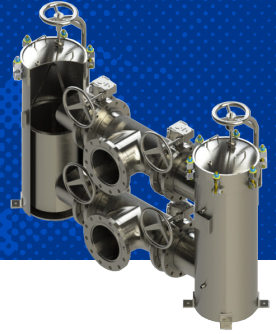

D4 MODEL | DIMENSIONAL DETAILS

93A Series (Flat Bottom w/ Swing Bolt) | 150#/300#

INLET/ OUTLET	BODY DIA.	A	B	C	D	E	WT LBS
2"	6.625"	60"	11"	8"	11"	9"	125
3"	8.625"	65"	14"	9"	14"	11"	220
4"	8.625"	72"	18"	9"	14"	11"	280
6"	10.750"	78"	22"	11"	16"	13"	400
8"	12.500"	86"	28"	16"	22"	27"	650
10"	16.500"	100"	32"	15"	26"	27"	770
12"	18.500"	110"	38"	18"	28"	33"	1100
14"	20.500"	120"	43"	21"	31"	34"	1400
16"	24.500"	135"	47"	25"	40"	37"	1800
18"	24.500"	145"	52"	27"	42"	40"	2200
20"	30.500"	160"	57"	29"	44"	42"	2800
24"	36.625"	170"	60"	42"	44"	50"	3200

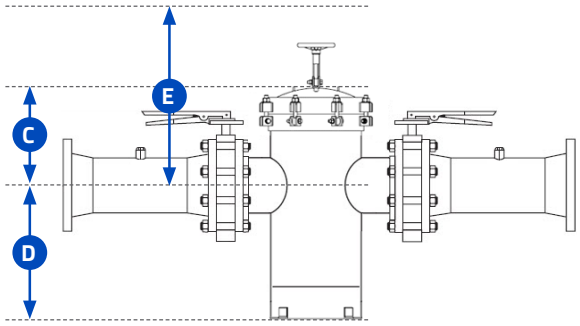

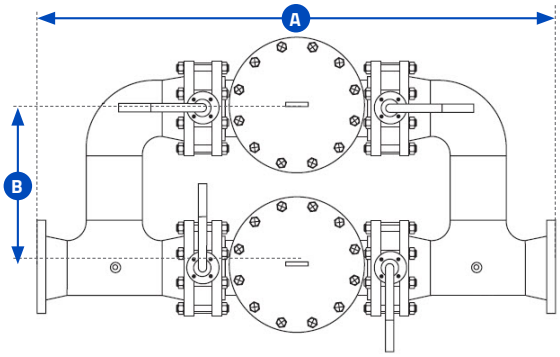

93C Series (Domed Bottom w/ Swing Bolt) | 150#/300#

INLET/ OUTLET	BODY DIA.	A	B	C	D	E	WT LBS
2"	6.625"	60"	11"	8"	16"	14"	175
3"	8.625"	65"	14"	9"	19"	16"	270
4"	8.625"	72"	18"	9"	19"	16"	330
6"	10.750"	78"	22"	11"	21"	18"	450
8"	12.500"	86"	28"	16"	27"	32"	700
10"	16.500"	100"	32"	15"	32"	33"	820
12"	18.500"	110"	38"	18"	34"	39"	1150
14"	20.500"	120"	43"	21"	38"	41"	1500
16"	24.500"	135"	47"	25"	49"	46"	1900
18"	24.500"	145"	52"	27"	51"	49"	2300
20"	30.500"	160"	57"	29"	53"	51"	2900
24"	36.625"	170"	60"	42"	55"	61"	3300

Available in sizes larger than 24". For 600# and above, please contact Fil-Trek. Specifications listed above are for reference only. All quotes are complete with certified drawing which indicate accurate dimensions and weight.

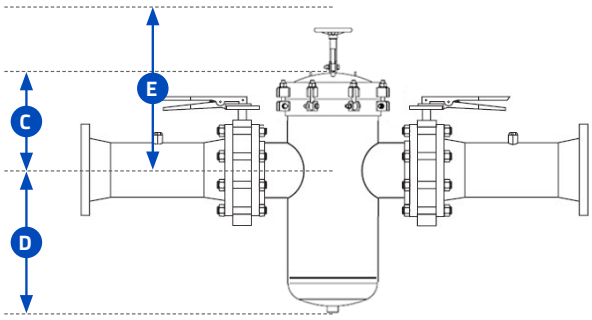

CHART LEGEND

- **A** Overall Width
- **B** Center to Flange
- **C** Flange to Lid
- **D** Floor to Inlet/Oulet
- **E** Cover Clearance Height

FIL-TREK

55 Stafford Court, Cambridge, ON N1T 1B3 **P** (519) 623-7448 **F** (519) 623-8807

For more information, e-mail: info@fil-trek.com or visit Fil-Trek.com

Duplex Basket Strainers

93 Series | Fabricated Duplex Basket Strainers

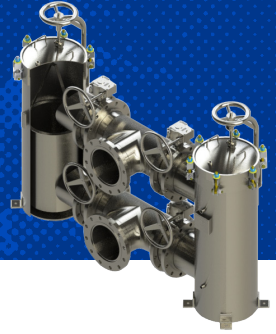

D4 MODEL | DIMENSIONAL DETAILS

93B Series (Flat Bottom w/ Thru Bolt) | 150#/300#

INLET/ OUTLET	BODY DIA.	A	B	C	D	E	WT LBS
2"	6.625"	60"	11"	6"	11"	10"	100
3"	8.625"	65"	14"	7"	14"	11"	195
4"	8.625"	72"	18"	7"	14"	11"	255
6"	10.750"	78"	22"	9"	16"	13"	375
8"	12.500"	86"	28"	14"	22"	18"	625
10"	16.500"	100"	32"	14"	26"	18"	745
12"	18.500"	110"	38"	16"	28"	20"	1075
14"	20.500"	120"	43"	19"	31"	23"	1350
16"	24.500"	135"	47"	23"	40"	27"	1750
18"	24.500"	145"	52"	25"	42"	29"	2150
20"	30.500"	160"	57"	27"	44"	31"	2750
24"	36.625"	170"	60"	34"	44"	38"	3150

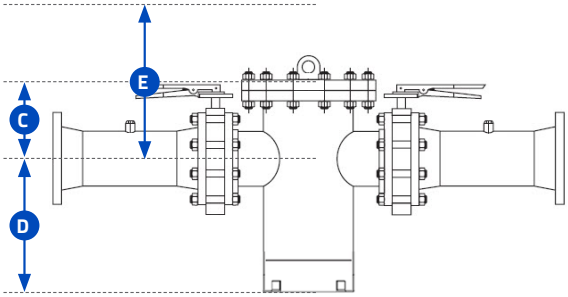

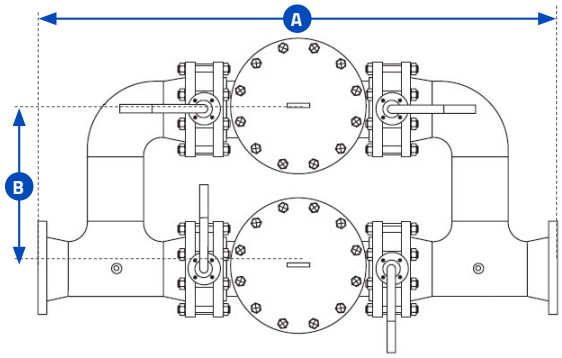

93D Series (Domed Bottom w/ Thru Bolt) | 150#/300#

INLET/ OUTLET	BODY DIA.	A	B	C	D	E	WT LBS
2"	6.625"	60"	11"	6"	16"	10"	125
3"	8.625"	65"	14"	7"	19"	11"	220
4"	8.625"	72"	18"	7"	19"	11"	280
6"	10.750"	78"	22"	9"	21"	13"	400
8"	12.500"	86"	28"	14"	27"	18"	650
10"	16.500"	100"	32"	14"	32"	18"	770
12"	18.500"	110"	38"	16"	34"	20"	1100
14"	20.500"	120"	43"	19"	38"	23"	1400
16"	24.500"	135"	47"	23"	49"	27"	1800
18"	24.500"	145"	52"	25"	51"	29"	2200
20"	30.500"	160"	57"	27"	53"	31"	2800
24"	36.625"	170"	60"	34"	55"	38"	3200

Available in sizes larger than 24". For 600# and above, please contact Fil-Trek. Specifications listed above are for reference only. All quotes are complete with certified drawing which indicate accurate dimensions and weight.

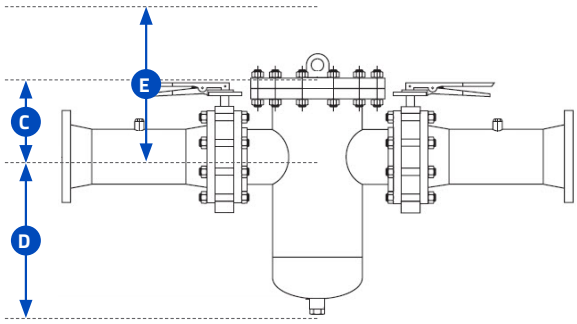

CHART LEGEND

- **A** Overall Width
- **B** Center to Flange
- **C** Flange to Lid
- **D** Floor to Inlet/Oulet
- **E** Cover Clearance Height

FIL-TREK

55 Stafford Court, Cambridge, ON N1T 1B3 **P** (519) 623-7448 **F** (519) 623-8807

For more information, e-mail: info@fil-trek.com or visit Fil-Trek.com

Duplex Basket Strainers

93 Series | Fabricated Duplex Basket Strainers

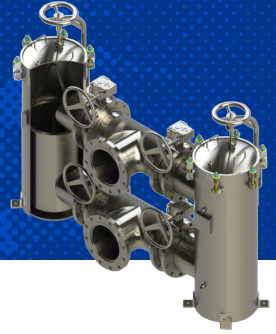

D5 MODEL | DIMENSIONAL DETAILS

93A Series (Flat Bottom w/ Swing Bolt) | 150#/300#

INLET/ OUTLET	BODY DIA.	A	B	C	D	E	F	WT LBS
2"	6.625"	52	16	8	8	5	44	150
3"	8.625"	55	16	9	9	6	44	250
4"	8.625"	57	16	10	10	7	44	300
6"	10.750"	64	20	14	14	9	48	450
8"	12.500"	84	24	20	18	11	64	750
10"	16.500"	92	32	21	20	13	72	850
12"	18.500"	102	36	26	24	15	79	1300
14"	20.500"	119	44	30	28	16	94	2000
16"	24.500"	124	44	36	30	17	94	2200
18"	24.500"	142	48	40	34	19	112	2800
20"	30.500"	161	56	43	38	21	124	3200
24"	36.625"	172	60	53	44	23	128	4000

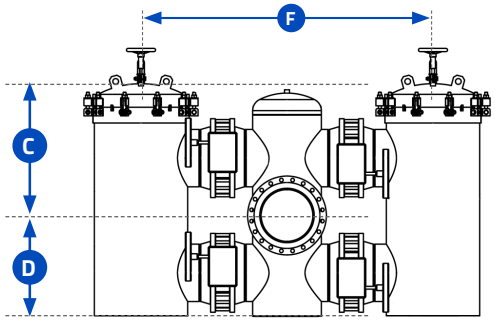

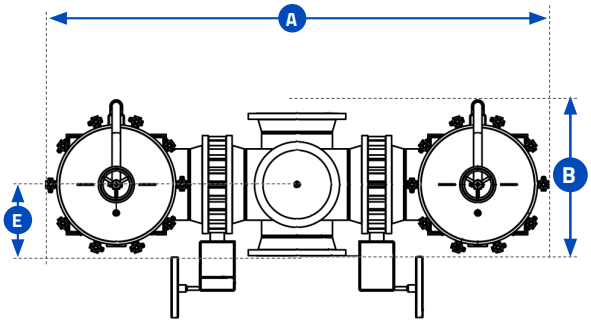

93C Series (Domed Bottom w/ Swing Bolt) | 150#/300#

INLET/ OUTLET	BODY DIA.	A	B	C	D	E	F	WT LBS
2"	6.625"	52	16	8	13	5	44	300
3"	8.625"	55	16	9	14	6	44	500
4"	8.625"	57	16	10	15	7	44	650
6"	10.750"	64	20	14	20	9	48	850
8"	12.500"	84	24	20	24	11	64	1200
10"	16.500"	92	32	21	28	13	72	2050
12"	18.500"	102	36	26	32	15	79	3250
14"	20.500"	119	44	30	38	16	94	4500
16"	24.500"	124	44	36	40	17	94	4950
18"	24.500"	142	48	40	44	19	112	5350
20"	30.500"	161	56	43	49	21	124	6050
24"	36.625"	172	60	53	57	23	128	6850

Available in sizes larger than 24'. For 600# and above, please contact Fil-Trek. Specifications listed above are for reference only. All quotes are complete with certified drawing which indicate accurate dimensions and weight.

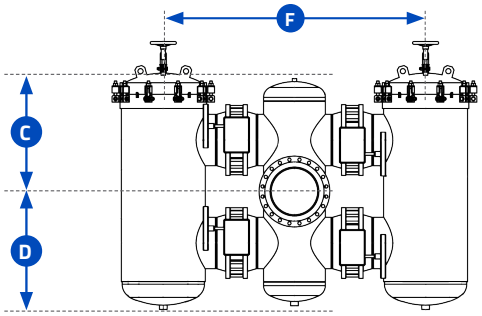

CHART LEGEND

A	Overall Width	**D**	Floor to Inlet/Oulet
B	Overall Depth	**E**	Center to Face
C	Flange to Lid	**F**	Center to Center

FIL-TREK

55 Stafford Court, Cambridge, ON N1T 1B3 **P** (519) 623-7448 **F** (519) 623-8807

For more information, e-mail: info@fil-trek.com or visit Fil-Trek.com

Duplex Basket Strainers

93 Series | Fabricated Duplex Basket Strainers

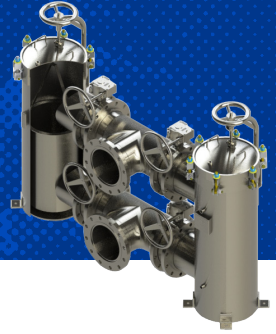

D5 MODEL | DIMENSIONAL DETAILS

93B Series (Flat Bottom w/ Thru Bolt) | 150#/300#

INLET/ OUTLET	BODY DIA.	A	B	C	D	E	F	WT LBS
2"	6.625"	52	16	8	8	5	44	200
3"	8.625"	55	16	10	9	6	44	400
4"	8.625"	57	16	11	10	7	44	550
6"	10.750"	64	20	15	14	9	48	750
8"	12.500"	84	24	22	18	11	64	1100
10"	16.500"	92	32	23	20	13	72	1950
12"	18.500"	102	36	28	24	15	79	3150
14"	20.500"	119	44	33	28	16	94	4300
16"	24.500"	124	44	39	30	17	94	4800
18"	24.500"	142	48	43	34	19	112	5200
20"	30.500"	161	56	47	38	21	124	5900
24"	36.625"	172	60	58	44	23	128	6700

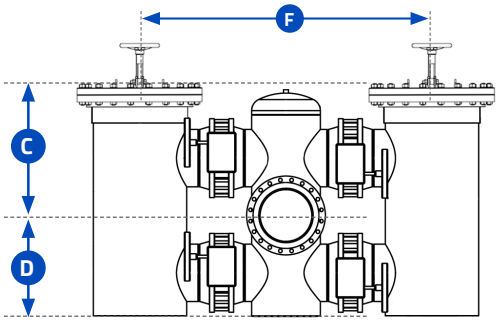

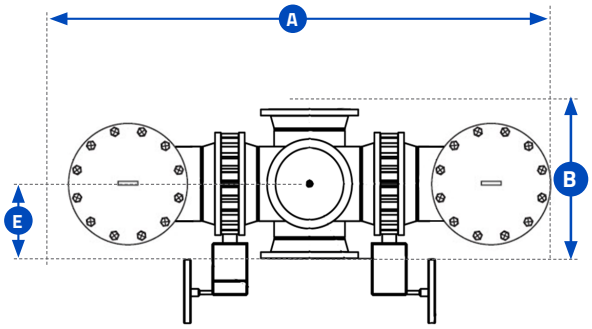

93D Series (Domed Bottom w/ Thru Bolt) | 150#/300#

INLET/ OUTLET	BODY DIA.	A	B	C	D	E	F	WT LBS
2"	6.625"	52	16	8	13	5	44	250
3"	8.625"	55	16	10	14	6	44	450
4"	8.625"	57	16	11	15	7	44	600
6"	10.750"	64	20	15	20	9	48	800
8"	12.500"	84	24	22	24	11	64	1150
10"	16.500"	92	32	23	28	13	72	2000
12"	18.500"	102	36	28	32	15	79	3200
14"	20.500"	119	44	33	38	16	94	4400
16"	24.500"	124	44	39	40	17	94	4900
18"	24.500"	142	48	43	44	19	112	5300
20"	30.500"	161	56	47	49	21	124	6000
24"	36.625"	172	60	58	57	23	128	6800

Available in sizes larger than 24". For 600# and above, please contact Fil-Trek. Specifications listed above are for reference only. All quotes are complete with certified drawing which indicate accurate dimensions and weight.

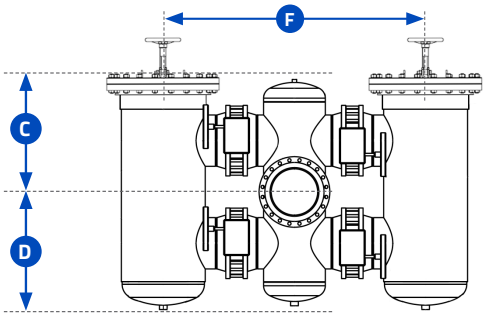

CHART LEGEND

A	Overall Width	**D**	Floor to Inlet/Oulet
B	Overall Depth	**E**	Center to Face
C	Flange to Lid	**F**	Center to Center

FIL-TREK

55 Stafford Court, Cambridge, ON N1T 1B3 **P** (519) 623-7448 **F** (519) 623-8807

For more information, e-mail: info@fil-trek.com or visit Fil-Trek.com

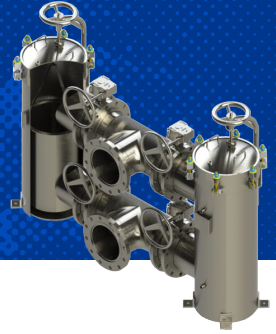

BASKET OPTIONS

We can manufacture replacement and custom basket designs for basket strainers, T strainers, Y strainers, duplex strainers and more...

Single & Multi Basket Design

Single baskets or multi basket design options are primarily based on size of strainer. A large strainer using a single basket can make it difficult to remove and maintain due to its weight. Multiple baskets can make removal much easier especially if overhead cranes or lifts are unavailable.

Custom Basket Design

We can customize our basket design to meet a variety of non-standard requirements. Angled or flat, alternate bottom designs etc.

Material of Construction

We can make strainer baskets in a variety of materials to meet a variety of requirements. Below is an outline of what materials we are capable of using;

- Carbon steel
- SS304 or SS316
- C 276
- AL6XN
- 2205
- 2507
- Monel 400
- Titanium

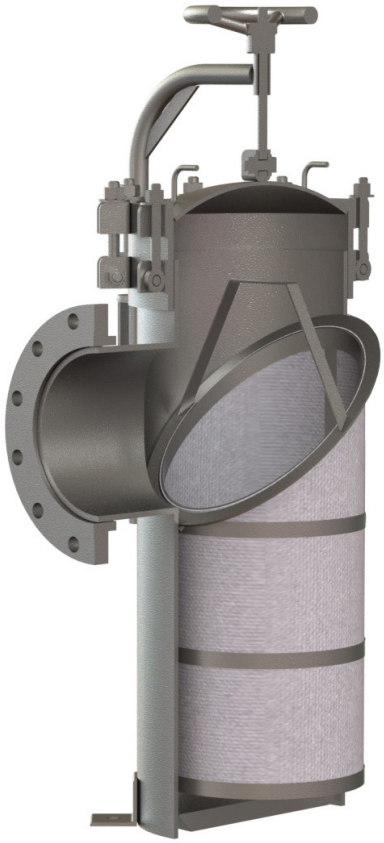

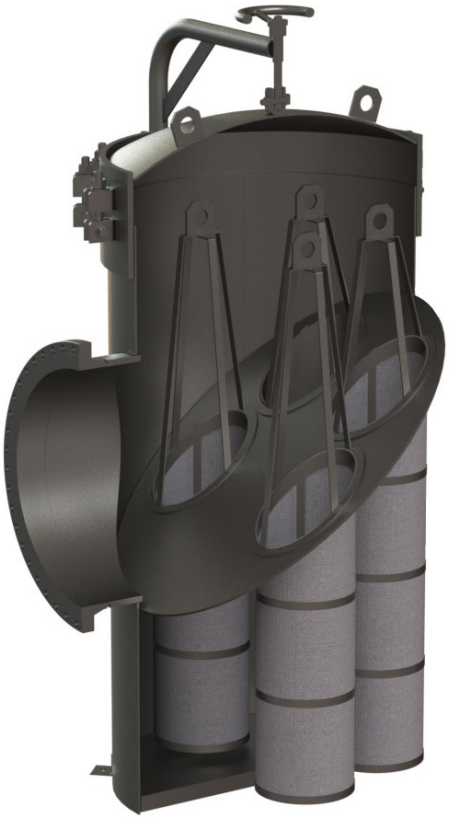

Duplex Basket Strainers

93 Series | Fabricated Duplex Basket Strainers

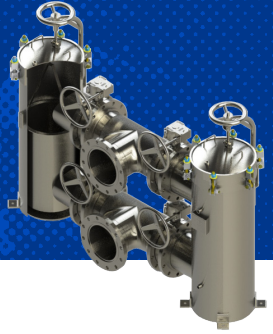

CLOSURE AND QUICK OPENING COVER OPTIONS

Fil-Trek designs and fabricates a variety of closure and quick opening cover options to accomodate strict applications and requirements. All materials of construction are in accordance with ASME specifications and manufacturing complies with the applicable rules of the ASME Code for Pressure Piping and with the ASME Boiler and Pressure Vessel Code.

HINGED COVER

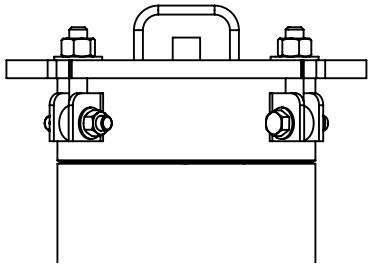

The most economical quick opening closure offered for fabricated strainers with nominal pressure applications. The swing bolt hinged cover uses an O-ring to seal. Easy to open by quickly and easily by loosening the swing bolts until they clear the holding lugs and swinging the head open on its hinge.

MECHANICAL DAVIT ASSEMBLY

Our mechanical davit assembly makes it easy for the operator to open and swing the cover away to facilitate basket or screen removal for cleaning. It is used primarily for larger strainers where cover removal is difficult and heavy. This is the most inexpensive alternative to quick release covers, especially when operating conditions require a bolted cover. Available for swing bolt and ANSI closures.

**Hydraulic davit head lift also available.

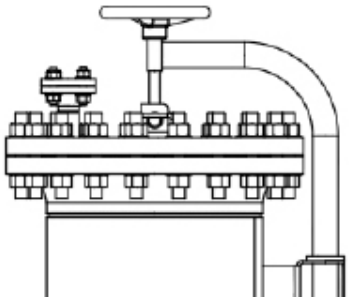

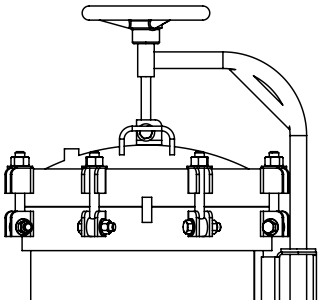

Duplex Basket Strainers

93 Series | Fabricated Duplex Basket Strainers

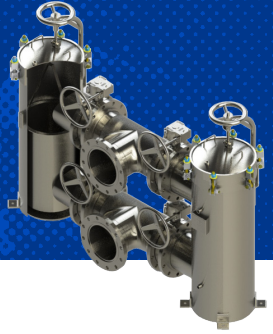

THREADED HINGED COVER

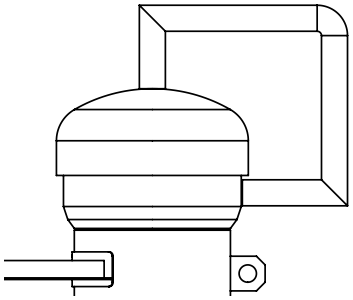

The quick open threaded hinged closure uses a cap fastened to a hub and is welded to the strainer body. The female cap is threaded onto the male hub using O-rings to seal. The O-ring prevents corrosion of the closure threads and provides a long, trouble free service. The threaded cover can be used for both nominal and high pressure applications. Available in both vertical and horizontal configurations.

YOKE CLOSURE

The Yoke hinged cover is a true ANSI rated closure and uses an O-ring seal. Used primarily on high pressure applications, it is available for 150#, 300#, 600#, 900# and 1500# ANSI ratings with a wide range of operating aids, ranging from a single lever chain and sprocket drive to completely automated.

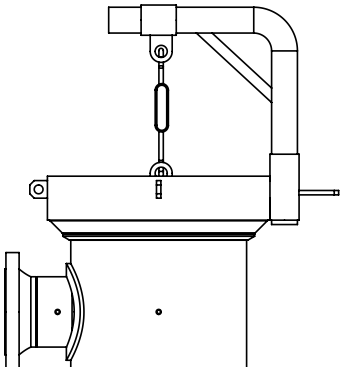

CLOSURE COMPARISON

	COVER TYPE			
	HINGED COVER	MECHANICAL DAVIT	THREADED COVER	YOKE CLOSURE
COST	Low	Moderate	High	High
QUICK OPENING ABILITY	Good	Fair	Best	Best
LOW PRESSURE APPLICATIONS	X	X	-	-
NOMINAL PRESSURE APPLICATIONS	X	X	X	X
HIGH PRESSURE APPLICATIONS	-	X	X	X

Duplex Basket Strainers

93 Series | Fabricated Duplex Basket Strainers

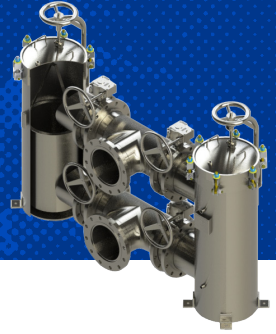

STRAINER APPLICATION WORKSHEET

Please use the following worksheet to enter as much detail as possible about the strainer application you are sizing for. The minimum requirement we need to help size will be the areas marked with an '*'.

Operating Conditions

Name of Gas* _____

Name of Liquid Present _____

Max. Operating Flow Rate* _____ **@** _____ *Pressure (PSIG)*

Gas Specific Gravity (Air = 1)* _____

OR Mole Weight/Composition _____

Type of System or Location in Process* _____

Dry? ☐ **Wet?** ☐

Min. Operating Pressure (PSIG)* _____

Max. Operating Pressure (PSIG) _____

Min. Operating Temperature (F) _____

Max. Operating Temperature (F)* _____

Amount of Liquids Present (GPD) _____

Specific Gravity (Water = 1) _____

Amount of Particulate Present (Parts per 100 scf) _____

Name of Particulate _____

Max. Allowable Clean Pressure Drop _____

(Standard = 2 PSID Flange to Flange)

Mechanical Data

Design Pressure Min.* _____ **Max.*** _____

Design Temperature Min.* _____ **Max.*** _____

ASME Code Required?* _____

Sour Service? ☐ **Acid Service?** ☐

If YES, Pressure (PSI) _____ **Temp (F)** _____

Corrosion Allowance (in) _____

Fire Safe Service _____

(ie All Connections/Closures Flanged?) _____

Inlet/Outlet Type Flanged ☐ Threaded ☐

Other (Please specify) _____

Type/ANSI Rating of Flanges (#) _____

Face RF ☐ RTJ ☐ **Type** SO ☐ WN ☐ LWN ☐

Vessel MOC CS ☐ SS304 ☐ SS316 ☐

Other (Please specify) _____

Internals MOC CS ☐ SS304 ☐ SS316 ☐

Other (Please specify) _____

Other Details

_____

_____

_____

_____

FIL-TREK

55 Stafford Court, Cambridge, ON N1T 1B3 **P** (519) 623-7448 **F** (519) 623-8807

For more information, e-mail: info@fil-trek.com or visit Fil-Trek.com

Duplex Basket Strainers

93 Series | Fabricated Duplex Basket Strainers

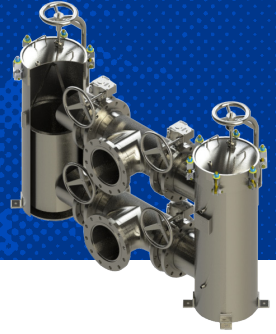

SCREEN/BASKET DESIGN CHECKLIST

Style "O"

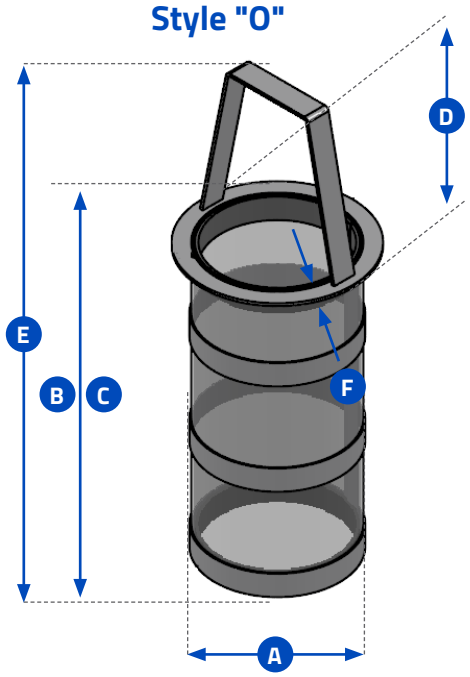

Style "I"

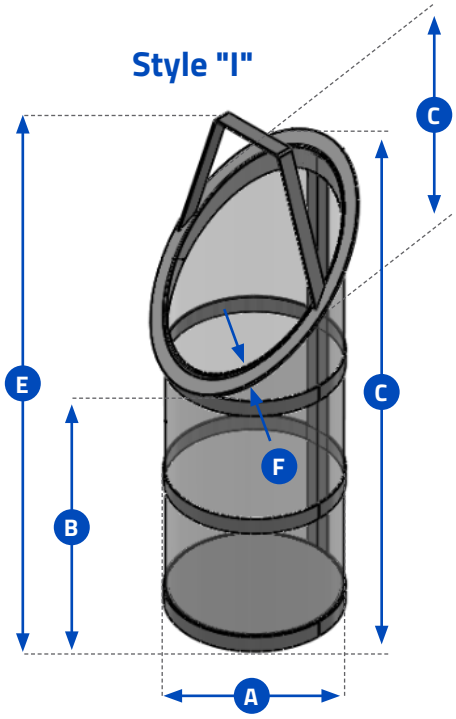

Performance Requirements

Req. Level of Filtration _____

Material of Construction _____

Min. Specified Burst Pressure _____

Flow Direction _____

Dimensional Requirements

Design Style (O or I) _____

A Basket Outside Diameter _____

B Basket Height - *Shortest* _____

C Basket Height - *Longest* _____

D Ring Outside Diameter _____

E Overall Height _____

F Ring Thickness _____

Additional Notes

_____

_____

_____

_____

_____

_____

_____

FIL-TREK

55 Stafford Court, Cambridge, ON N1T 1B3 **P** (519) 623-7448 **F** (519) 623-8807

For more information, e-mail: info@fil-trek.com or visit Fil-Trek.com

Duplex Basket Strainers

93 Series | Fabricated Duplex Basket Strainers

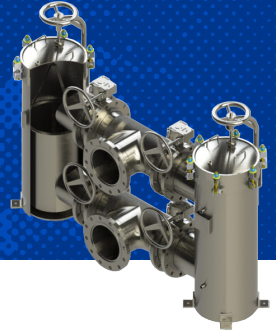

SCREEN OPENINGS

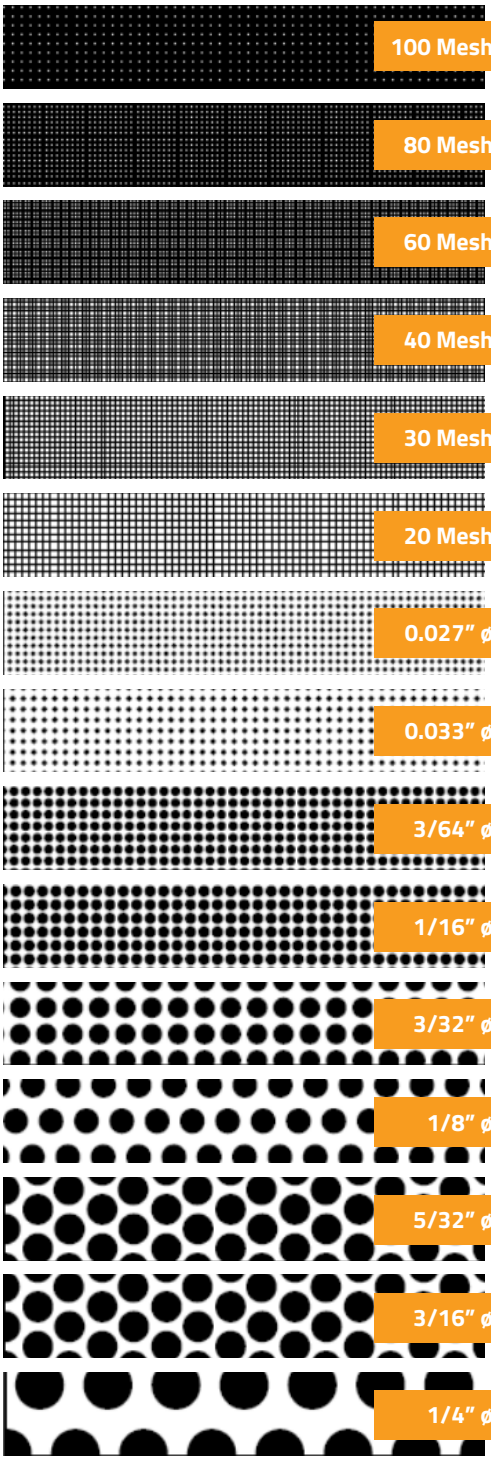

100 Mesh	30% O.A. 0.006" Openings
80 Mesh	31% O.A. 0.007" Openings
60 Mesh	30% O.A. 0.009" Openings
40 Mesh	36% O.A. 0.016" Openings
30 Mesh	41% O.A. 0.021" Openings
20 Mesh	46% O.A. 0.035" Openings
0.027" ø	23% O.A.
0.033" ø	28% O.A.
3/64" ø	36% O.A.
1/16" ø	23% O.A.
3/32" ø	33% O.A.
1/8" ø	40% O.A.
5/32" ø	63% O.A.
3/16" ø	51% O.A.
1/4" ø	42% O.A.

FACTORS TO CONSIDER

1 Purpose

If the strainer is being used for protection rather than direct filtration, standard screens will suffice in most applications.

2 Service

With services that require extremely sturdy screens, such as high pressure/temperature applications or services with high viscosities, perforated screens without mesh liners are recommended. If a mesh liner is required to obtain a certain level of filtration, then a trapped perf/mesh/perf combination is recommended.

3 Filtration Level

When choosing a perf. or a mesh/perf. combination, attention should be given to ensure overstraining does not occur. As a general rule, the specified level of filtration should be no smaller than half the size of the particle to be removed. If too fine a filtration is specified, the pressure drop through the strainer will increase very rapidly, possibly causing damage to the screen.

Screen openings other than those shown above are readily available. Various mesh sizes as fine as 5 micron and perforated plate as coarse as 1/2" Dia. are in inventory.

Screens are available in a wide range of materials. Screens of carbon steel, stainless steel (304, 316), alloy 20, monel 400, hastelloy C and titanium grade 2 are in inventory.

Custom manufactured screens are available upon request. Please consult factory.

Duplex Basket Strainers

93 Series | Fabricated Duplex Basket Strainers

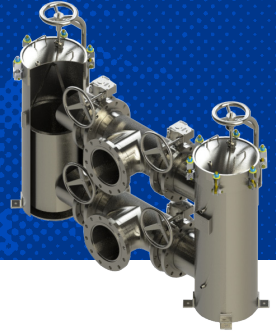

PRESSURE DROP | LIQUIDS

Fabricated Basket Strainers | 2" to 24"

Figure 1

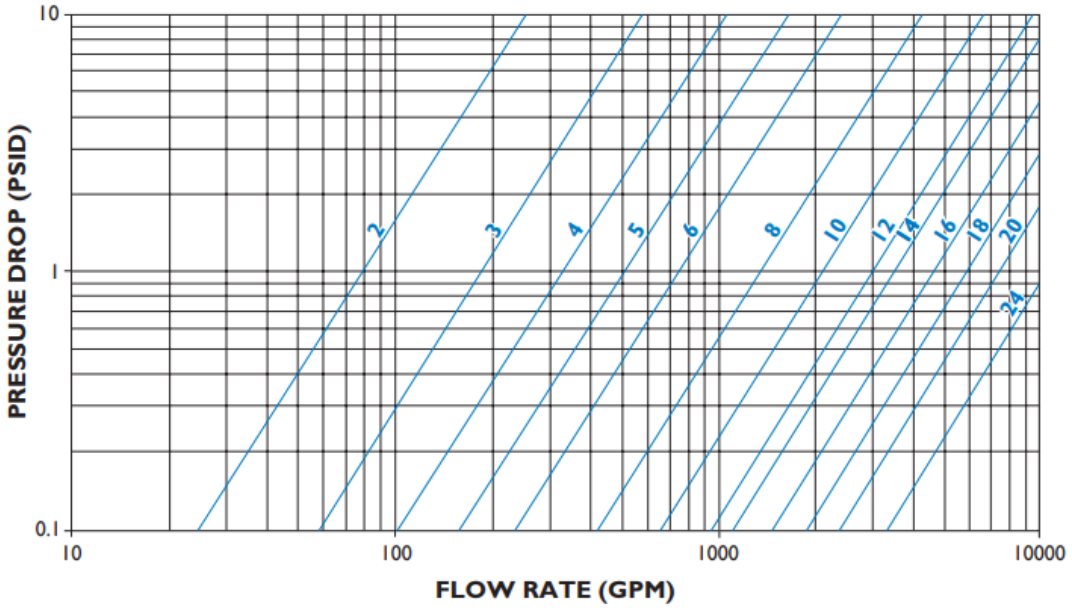

Fabricated Duplex Basket Strainers | 5" to 24"

Figure 2

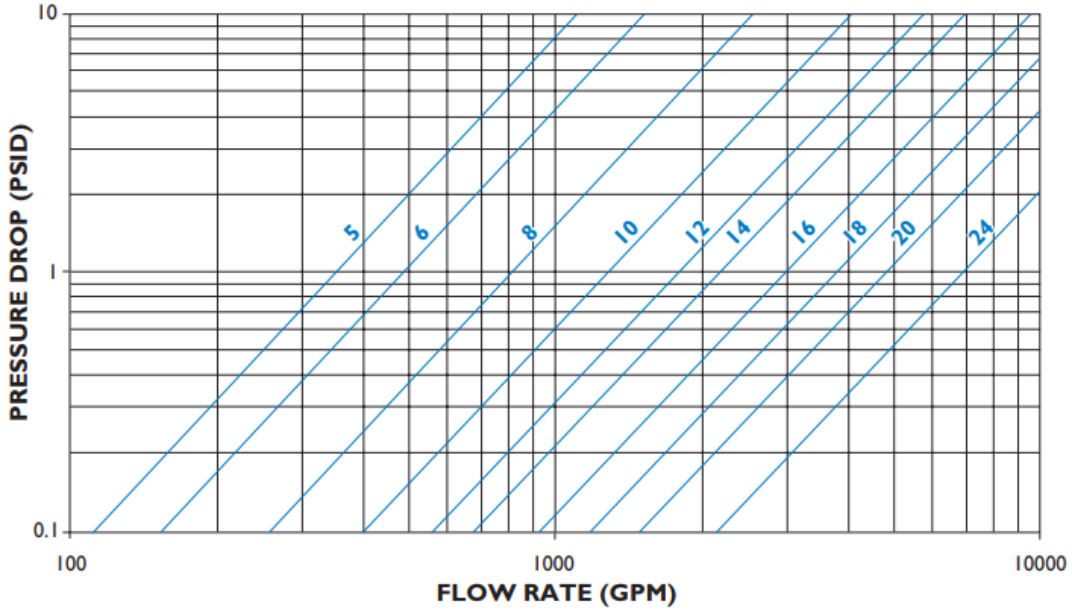

Notes:

Pressure drop curves are based on water flow with standard screens.

See Chart # 1 for correction factors to be used with other fluids and/or screen openings.

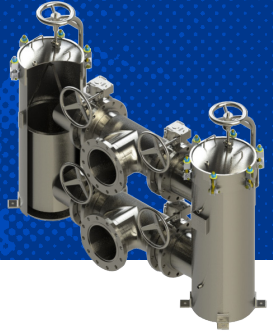

PRESSURE DROP | LIQUIDS

Fabricated T Strainers | 2" to 24"

Figure 3

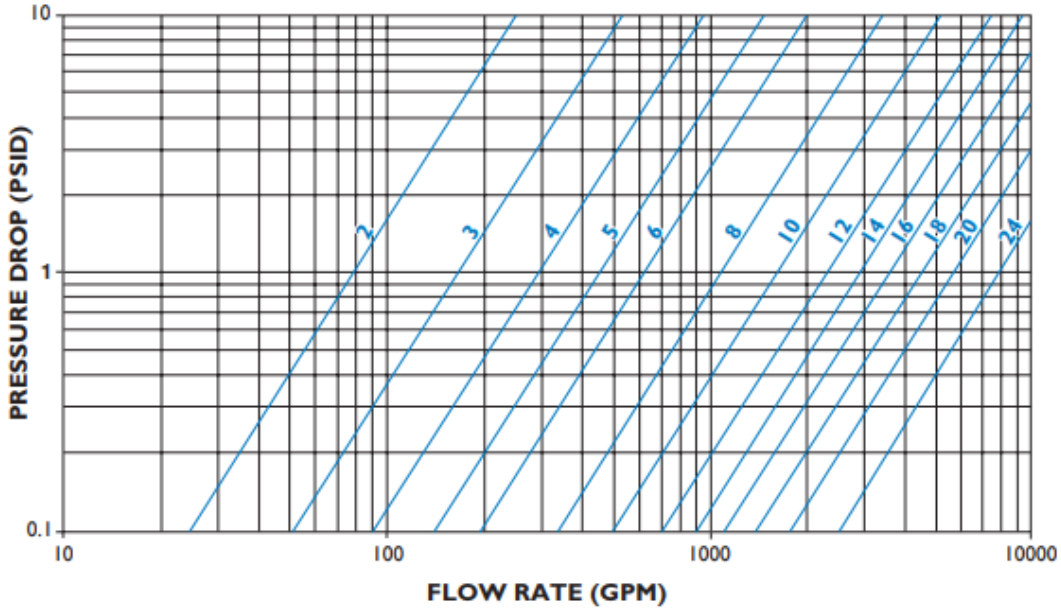

Fabricated Y Strainers | 2" to 24"

Figure 4

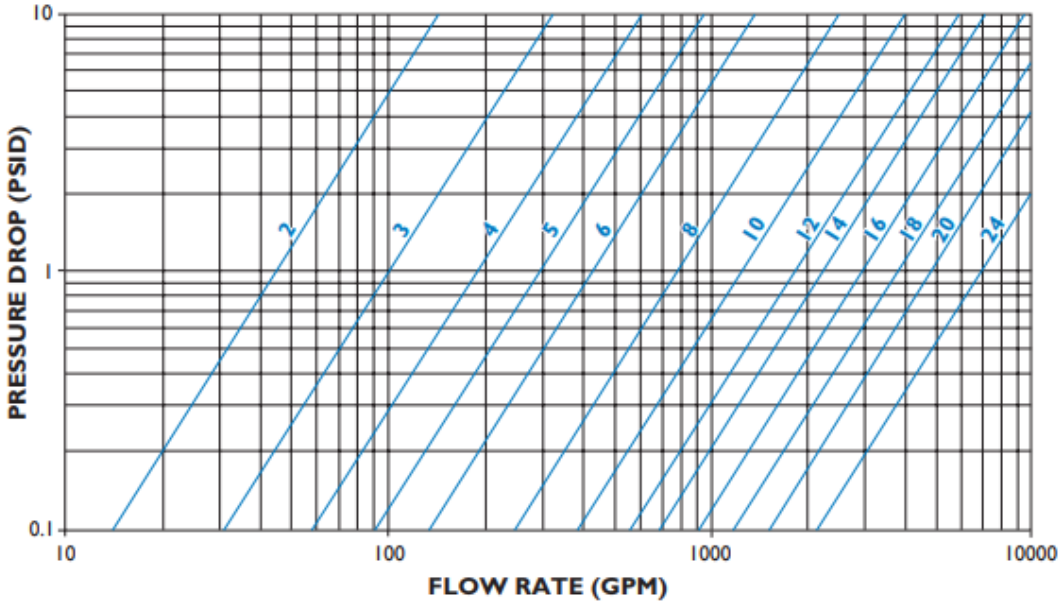

Notes:

Pressure drop curves are based on water flow with standard screens.

See Chart # 1 for correction factors to be used with other fluids and/or screen openings.

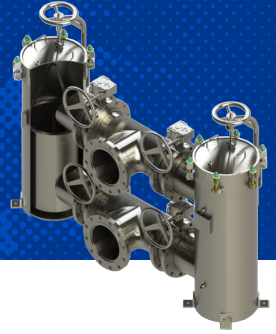

PRESSURE DROP | LIQUIDS

Temporary Strainers | 3/4" to 5"

Figure 5

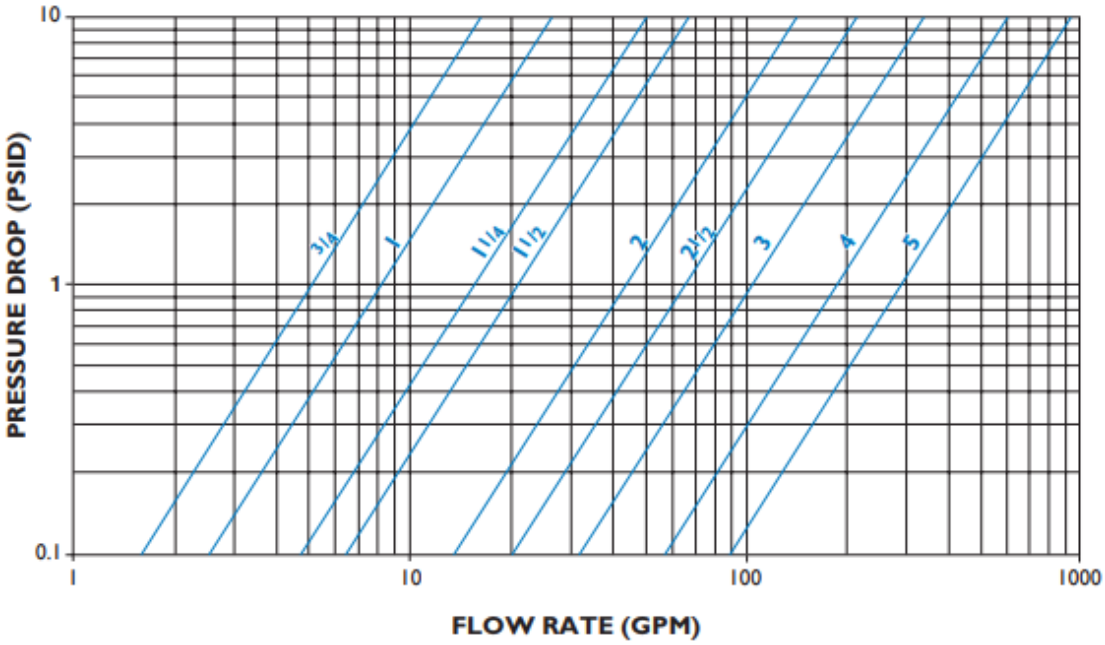

Temporary Strainers | 6" to 48"

Figure 6

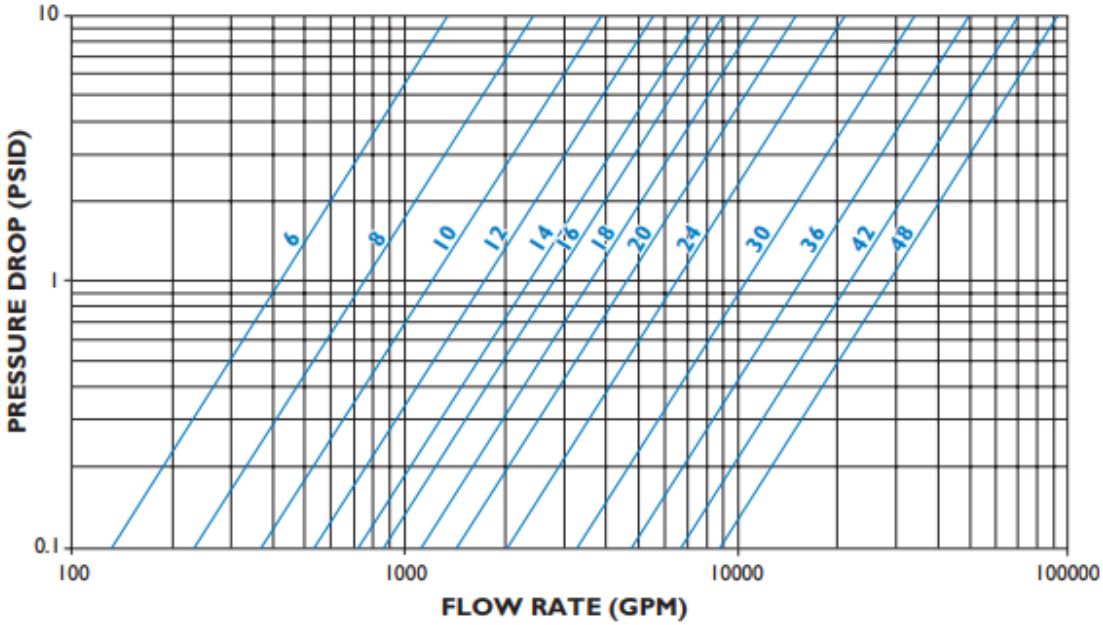

Notes:

Pressure drop curves are based on water flow with standard screens.

See Chart # 1 for correction factors to be used with other fluids and/or screen openings.

Duplex Basket Strainers

93 Series | Fabricated Duplex Basket Strainers

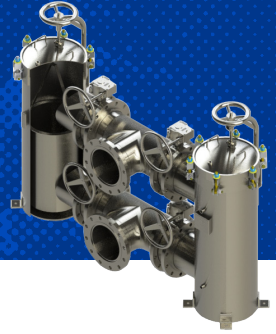

SCREEN CORRECTION FACTOR CHART

Non-Standard and Mesh Lined Screens

Chart # 1

	PERF. PLATE % SCREEN MATERIAL OPEN AREA					MESH LINED SCREENS % SCREEN MATERIAL OPENING AREA		
SIZE RANGE	60%	50%	40%	30%	20%	50%	40%	30%
1/4" to 1 1/2"	0.45	0.55	0.70	1.00	1.15	1.05	1.05	1.20
2" to 48"	0.65	0.80	1.00	1.40	2.15	1.05	1.05	1.20

BASKET STRAINER EXAMPLE

Strainer Size:	10"
Screen Size:	100 Mesh, 1/8" Perf
Flow Rate:	3000 GPM
Service:	Water
Specific Gravity:	1
Viscosity:	100 cP

How To Calculate:	**RESULTS**
1) Use Figure 1 to get the pressure drop of the screen.	**2.0**
2) Refer to the Screen Opening chart to determine the % Open Area of the mesh/screen size being used.	**30%**
3) Using the chart above, find the correction factor to be used.	**1.20**
4) Multiply the PSID by the correction factor to determine the total pressure drop.	**2.4**
Example:	**2.0 x 1.2 = 2.4 PSID clean**

VISCOSITY & DENSITY CORRECTION FACTOR CHART

Chart # 2

SIZE RANGE	COMPONENT FACTOR (CF)
3/4" to 1 1/2"	0.25
2" to 48"	0.35

Chart # 3

		SCREEN LOSS FACTOR			
VISCOSITY (cP)	BODY LOSS FACTOR (BF)	PERF ONLY (PF)	20 MESH (MF)	30 to 40 MESH (MF)	60 to 300 MESH (MF)
10	1.0	1.15	1.20	1.40	1.50
25	1.2	1.25	2.00	2.20	2.50
100	1.6	1.40	3.00	4.00	6.50
200	2.2	1.50	4.50	7.00	11.50
500	4.4	1.60	10.00	15.00	25.00
1000	8.0	1.70	15.00	30.00	50.00
2000	15.0	1.90	30.00	60.00	100.00

How To Calculate:	**RESULTS**
1) Use the pressure drop (P1) through the strainer with water flow and standard or mesh screens from Chart # 1.	**2.4**
2) Multiply P1 by the specific gravity of the fluid actually flowing through the strainer to get P2.	**2.4**
3) Using Chart # 2 above, multiply P2 by the correct component factor to get P3.	**0.84**
4) Subtract P3 from P2 to equal P4.	**1.56**
5) Multiply P3 by the appropriate Body Loss factor from Chart # 3 above to get P5.	**1.34**
6) Multiply P4 by the appropriate Screen Loss factor from Chart # 3 above to get P6.	**10.14**
7) Total pressure drop will be P5 + P6 = P7.	**Total Pressure Drop = 11.48 PSID clean**

FIL-TREK

55 Stafford Court, Cambridge, ON N1T 1B3 **P** (519) 623-7448 **F** (519) 623-8807

For more information, e-mail: info@fil-trek.com or visit Fil-Trek.com

Duplex Basket Strainers

93 Series | Fabricated Duplex Basket Strainers

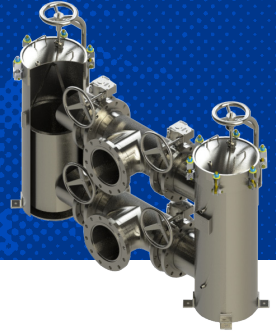

CORRECTION FACTORS

For Clogged Screens

Chart # 4

% CLOGGED	RATIO OF FREE SCREEN AREA TO PIPE AREA						
	10:1	8:1	6:1	4:1	3:1	2:1	1:1
10%	-	-	-	-	-	-	3.15
20%	-	-	-	-	-	1.15	3.90
30%	-	-	-	-	-	1.40	5.00
40%	-	-	-	-	-	1.80	6.65
50%	-	-	-	-	1.25	2.50	9.45
60%	-	-	-	1.15	1.80	3.70	14.50
70%	-	-	-	1.75	2.95	6.4	26.00
80%	-	1.10	1.75	3.60	6.25	14.00	58.00
90%	2.30	3.45	6.00	13.50	24.00	55.00	-

NOTES:

1. See Figures 7 to 10 for the ratio of free area to pipe area for Fil-Trek strainers equipped with standard screens.
2. For screens other than Fil-Trek standard, use the following formula to calculate the ratio free area to pipe area:

$$R = \frac{Ag \times OA}{100Ap}$$

where;

R = Ratio free area to pipe area
Ag = Gross screen area, sq. in. (see Figures 7 to 10)
OA = Open area of screen media, % (Screen Opening chart, i.e. 1/8" perf = 40%)
Ap = Nominal area of pipe fitting, sq. in. (see Figures 7 to 10)

STANDARD SCREEN EXAMPLE

T Strainer Size:	8"
Screen Size:	5/32" Perf
Flow Rate:	1000 GPM
Service:	Water
% Clogged:	60%

How To Calculate:	*RESULTS*
1) Find the pressure drop using Figure 3 .	**0.9**
2) Reference the ratio of free area to pipe area using Figure 9.	**1.3:1 (round down to 1:1)**
3) Using Chart # 4 above, find the correction factor based on the % clogged.	**3.9**
4) Calculate the total pressure drop by multiplying the pressure drop from step 1 with the correction factor from step 3.	**0.9 x 3.9 = 3.51 PSID**

NON STANDARD SCREEN EXAMPLE

T Strainer Size:	8"
Screen Size:	1/8" Perf
Flow Rate:	1000 GPM
Service:	Water
% Clogged:	20%

How To Calculate:	*RESULTS*
1) Find the pressure drop on page using Figure 3 with a standard screen size.	**0.9**
2) Using the Screen Correction chart to determine the % of open area (OA) of 5/32" perf.	**58%**
3) See Chart # 1 to find the correction factor for 5/32" perf (round up).	**0.65**
4) Multiply step 1 by the pressure drop from step 3.	**0.9 x 0.65 = 0.59 PSID**
5) SINCE a non-standard screen is being used, use the formula above to calculate the Ratio free area to pipe area (Ag = 167, OA = 58%, Ap = 50.3).	**1.9:1 (round up to 2:1)**
6) Using the result from step 5, check Chart # 4 to find the correction factor.	**3.7**
7) Multiply results from step 4 and step 6 to get the pressure drop when clogged.	**0.59 x 3.7 = 2.2 PSID**

Duplex Basket Strainers

93 Series | Fabricated Duplex Basket Strainers

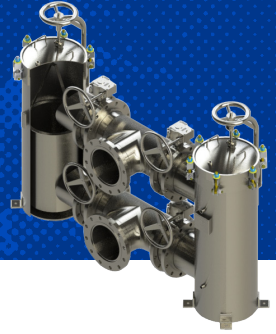

FABRICATED STRAINER SCREEN EFFECTIVE AREAS

Basket Strainers | 2" to 24"

Figure 7

PIPE SIZE (IN)	PERF. DIAMETER (IN)	NOM. AREA OF SCH 40/STD. PIPE (IN^2)	GROSS SCREEN AREA (IN^2)	FREE AREA (IN^2)	RATIO FREE AREA TO PIPE AREA (OAR)
2	1/8"	3.36	215	86	25.6
3	1/8"	7.39	265	106	14.3
4	1/8"	12.73	265	106	8.3
5	1/8"	20.01	380	152	7.6
6	1/8"	28.89	560	224	7.8
8	1/8"	50.03	570	228	4.6
10	1/8"	78.85	910	364	4.6
12	1/8"	113.10	1300	520	4.6
14	3/16"	140.50	1600	640	4.6
16	3/16"	185.66	1830	732	3.9
18	3/16"	237.10	2290	916	3.9
20	3/16"	294.83	2800	1120	3.8
24	3/16"	429.13	4090	1636	3.8

Duplex Basket Strainers | 2" to 24"

Figure 8

PIPE SIZE (IN)	PERF. DIAMETER (IN)	NOM. AREA OF SCH 40/STD. PIPE (IN^2)	GROSS SCREEN AREA (IN^2)	FREE AREA (IN^2)	RATIO FREE AREA TO PIPE AREA (OAR)
2	1/8"	3.36	215	86	25.6
3	1/8"	7.39	265	106	14.3
4	1/8"	12.73	265	106	8.3
5	1/8"	20.01	380	152	7.6
6	1/8"	28.89	560	224	7.8
8	1/8"	50.03	570	228	4.6
10	1/8"	78.85	910	364	4.6
12	1/8"	113.10	1300	520	4.6
14	3/16"	140.50	1600	640	4.6
16	3/16"	185.66	1830	732	3.9
18	3/16"	237.10	2290	916	3.9
20	3/16"	294.83	2800	1120	3.8
24	3/16"	429.13	4090	1636	3.8

OAR = Free Screen Area / Inlet Area
Free Screen Area = Opening % x Gross Screen Area
Values shown are approximate. Consult factory for exact ratios.

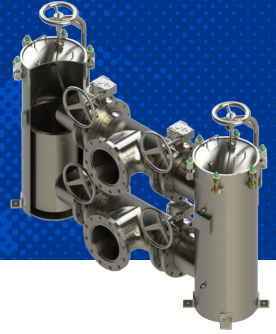

FABRICATED STRAINER SCREEN EFFECTIVE AREAS

T Strainers | 2" to 24"

Figure 9

PIPE SIZE (IN)	PERF. DIAMETER (IN)	NOM. AREA OF SCH 40/STD. PIPE (IN^2)	GROSS SCREEN AREA (IN^2)	FREE AREA (IN^2)	RATIO FREE AREA TO PIPE AREA (OAR)
2	1/8"	3.36	22	9	2.6
3	1/8"	7.39	40	16	2.2
4	1/8"	12.73	58	23	1.8
5	1/8"	20.01	82	33	1.6
6	1/8"	28.89	105	42	1.5
8	1/8"	50.03	167	67	1.3
10	1/8"	78.85	235	94	1.2
12	1/8"	113.10	330	132	1.2
14	3/16"	140.50	420	168	1.2
16	3/16"	185.66	510	204	1.1
18	3/16"	237.1	640	256	1.1
20	3/16"	294.83	780	312	1.1
24	3/16"	429.13	1060	424	1.0

Y Basket Strainers | 2" to 24"

Figure 10

PIPE SIZE (IN)	PERF. DIAMETER (IN)	NOM. AREA OF SCH 40/STD. PIPE (IN^2)	GROSS SCREEN AREA (IN^2)	FREE AREA (IN^2)	RATIO FREE AREA TO PIPE AREA (OAR)
2	1/8"	3.36	39	16	4.6
3	1/8"	7.39	77	31	4.2
4	1/8"	12.73	135	54	4.2
5	1/8"	20.01	160	64	3.2
6	1/8"	28.89	215	86	3.0
8	1/8"	50.03	375	150	3.0
10	1/8"	78.85	545	218	2.8
12	1/8"	113.10	785	314	2.8
14	3/16"	140.50	900	360	2.6
16	3/16"	185.66	1210	484	2.6
18	3/16"	237.1	1560	625	2.6
20	3/16"	294.83	1950	780	2.6
24	3/16"	429.13	2765	1106	2.6

OAR = Free Screen Area / Inlet Area
Free Screen Area = Opening % x Gross Screen Area
Values shown are approximate. Consult factory for exact ratios.

Duplex Basket Strainers

93 Series | Fabricated Duplex Basket Strainers

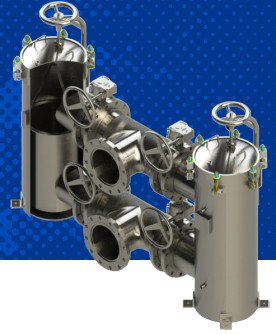

INSTALLATION AND MAINTENANCE INSTRUCTIONS

Strainer installation instructions

- Ensure all machined surfaces are free of defects and that the inside of the strainer is free of foreign objects.
- For horizontal and vertical pipelines, the strainer should be installed so that the blow-down drain connection is pointed downward.
- For flanged end strainers, the flange bolting should be tightened gradually in a back and forth clockwise motion. Threaded end strainers should use an appropriate sealant.
- Once installed, increase line pressure gradually and check for leakage around joints.
- If the strainer is supplied with a start-up screen, monitor pressure drop carefully.

Screen removal instructions

- Drain piping
- Vent line to relieve pressure.
- Loosen cover and open to access screen.
- Remove, clean and replace screen in original position (Note: In some instances, a high pressure water jet or steam may be required for effective cleaning)
- Inspect cover gasket for damage. If necessary, replace. (Note: If spiral wound gaskets have been used, they must be replaced and can not be used again)
- Tighten cover. The strainer is ready for line startup.

CAUTION SHOULD BE TAKEN DUE TO POSSIBLE EMISSION OF PROCESS MATERIAL FROM PIPING. ALWAYS ENSURE NO LINE PRESSURE EXISTS WHEN OPENING COVER

Maintenance instructions

For maximum efficiency, determine the length of time it takes for the pressure drop to double that in the clean condition. Once the pressure drop reaches an unacceptable value, shut down line and follow the "Screen Removal Instructions" above. A pressure gauge installed before and after the strainer in-line will indicate pressure loss due to clogging and may be used to determine when cleaning is required.

Trouble shooting guides and diagnostic techniques

- After pressurizing, inspect cover and other joints for leakage. Gasket replacement or cover tightening is necessary if leakage occurs.
- If the required filtration is not taking place, ensure the screen is installed in the correct position, that being flush to the screen seating surfaces.

WARNING

This product operates in pipelines or with equipment that carries fluids and/or gasses at elevated temperatures and pressures. Caution should be taken to make sure that this equipment is installed correctly and inspected regularly. Caution should also be taken to protect personnel from fluid or gas leakage.