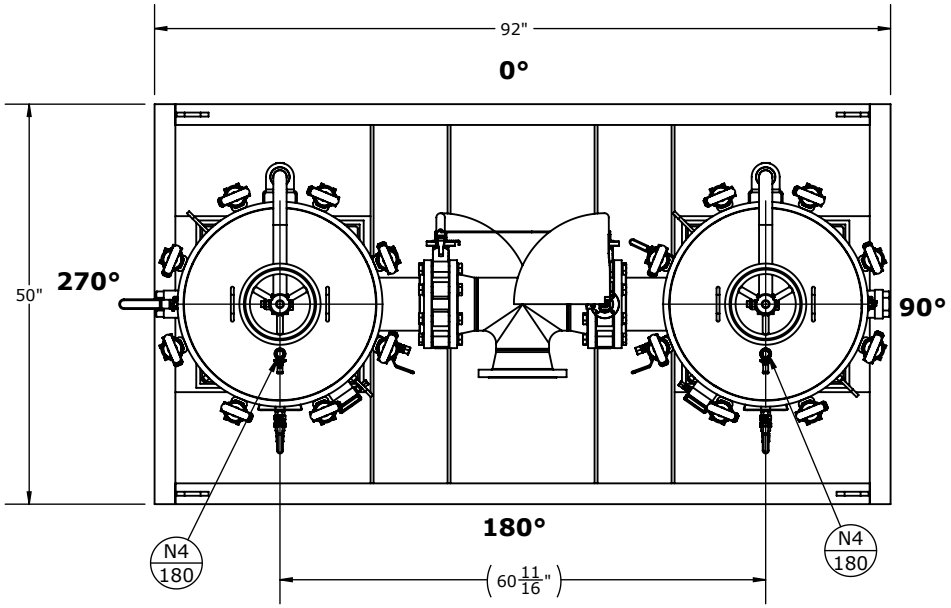

NOTES:

- DRY WEIGHT: **2049** LBS
- SHIPPING WEIGHT: **2150** LBS
- FLOODED WEIGHT: **3200** LBS
- VOLUME: **12.43** FT³/VESSEL
- VESSEL WILL HOUSE (QTY=14) SIZE 2 SS316 BASKETS
- CS SKID WITH **10" × 6"** FORKLIFT POCKETS
- CS SKID TO BE GALVANIZED
- INCLUDE DP GAUGE ASSEMB WITH **HARD POLYPRO PLASTIC TUBING**
- BALL VALVES AT DRAIN & VENT
- SHIPPING SHEET
- DO NOT APPLY FIL-TREK'S STICKER

NOZZLE SCHEDULE			
MARK	QTY	SIZE / RATING	DESCRIPTION
N1	1	6" 150# RFWN	INLET
N2	1	6" 150# RFWN	OUTLET
N3	4	1/2" 3000# NPT	PRESSURE GAUGE
N4	2	1/2" 3000# NPT	VENT
N5	2	2" 3000# NPT	CLEAN DRAIN
N6	2	1/2" 3000# NPT	DIRTY DRAIN

VESSEL DESIGN CONDITIONS			
CODE:	ASME SECTION VIII DIV. 1, 2023 EDITION		
M.A.W.P.:	150 PSI @ 250°F	M.D.M.T.:	-20° F @ 150 PSI
M.A.W.P.:	FV PSI @ 250°F		
CORROSION ALLOWANCE:	NONE	HYDROTEST PRESS:	210 PSI
STAMP:	'U'	SERVICE:	UNK. LIQUID NON LETHAL
PWHT:	N/A	RADIOGRAPHY:	N/A
MATERIAL:	SS316	GASKET:	VITON

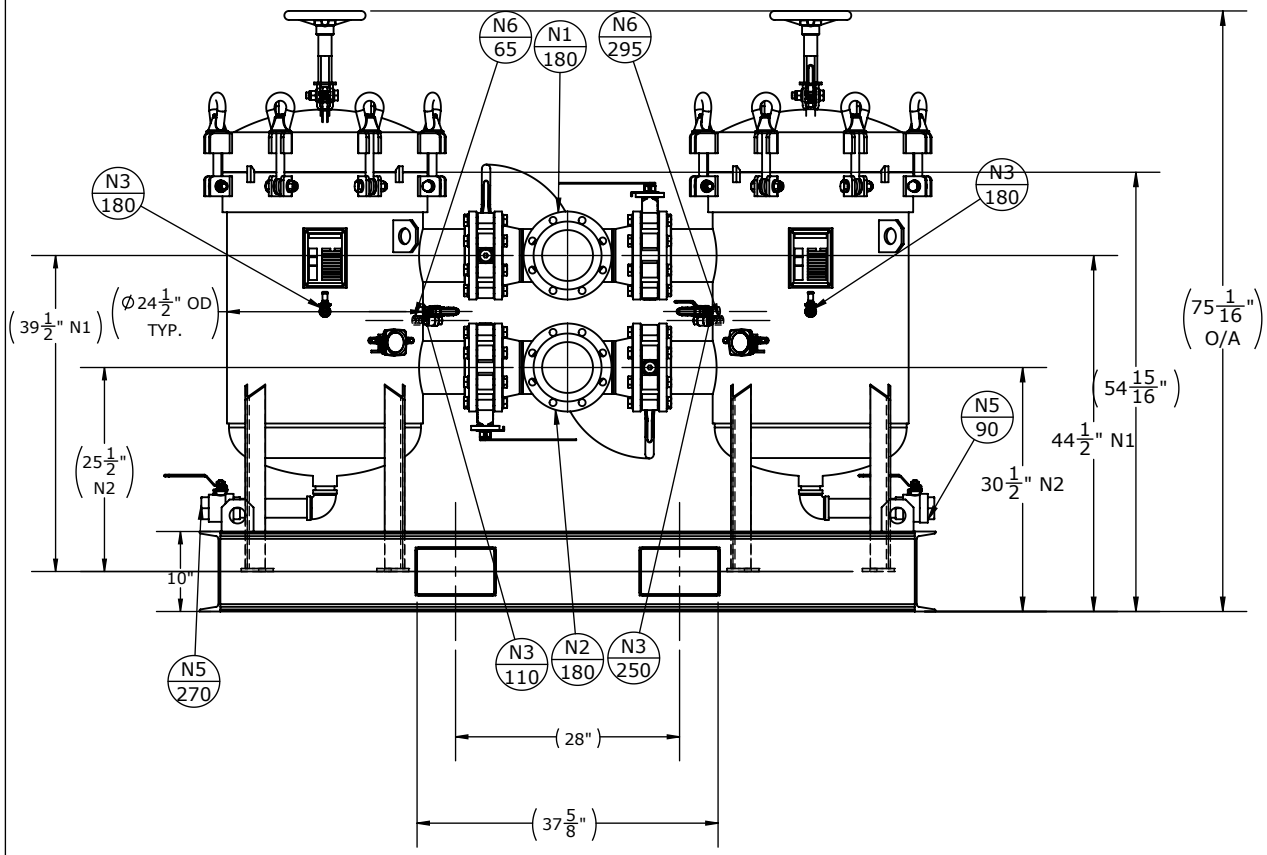

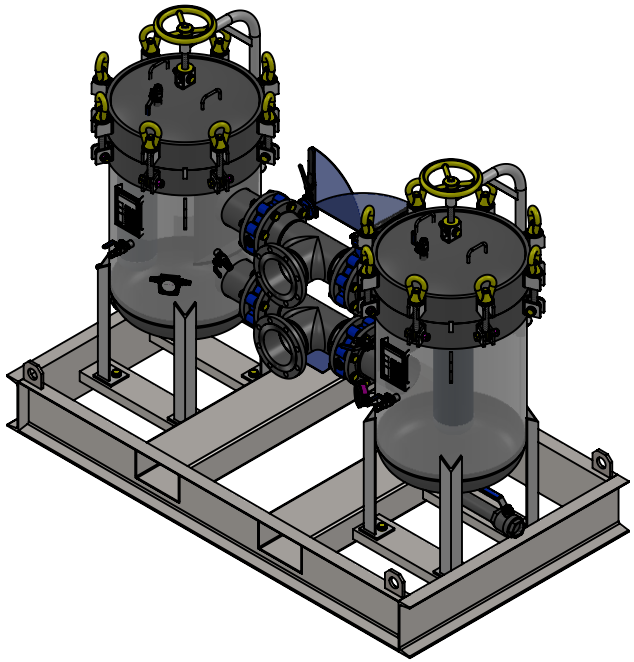

THIRD ANGLE PROJECTION

TOLERANCES-UNLESS OTHERWISE NOTED

DECIMAL	.X	=±.1"
	.XX	=±.02"
	.XXX	=±.005"
FRACTIONAL		=±1/8"
ANGULAR		=± 1°
MAX. MACHINED SURFACE FINISH		125

FIL-TREK CORPORATION

55 Stafford Court
Cambridge, Ontario
N1T 1B3
Canada

Phone: (519) 623-7448
Fax: (519) 623-8807
Email: info@fil-trek.com
Website: www.fil-trek.com

THIS DRAWING IS THE PROPERTY OF 'FIL-TREK CORPORATION' AND MUST NOT BE COPIED OR USED IN ANY WAY DETRIMENTAL TO THE CORPORATION

EQUIPMENT: BAG FILTER VESSELS (LPDV SERIES)

MODEL NO: S6LPDV24-1412-6F-V2-150-SKID

CUSTOMER:

PARENT:	DRAWN: DP	DATE: 7/9/2024	SERIAL No.	Part. No.	REV. No.
NONE	CHK'D: NP	SCALE: NTS	V15117	002004-00774	5