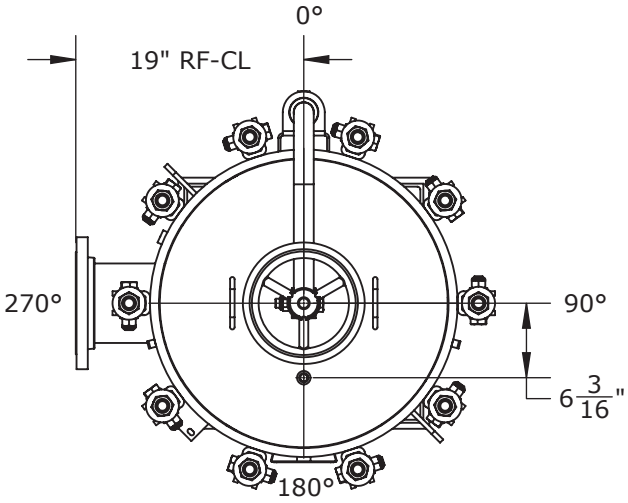

NOZZLE SCHEDULE			
MARK	QTY	SIZE / RATING	DESCRIPTION
N1	1	6" 150# RFSO	INLET
N2	1	6" 150# RFSO	OUTLET
N3	2	1/2" 3000# NPT	PRESSURE GAUGE
N4	1	1/2" 3000# NPT	VENT
N5	1	2" 3000# NPT	CLEAN DRAIN
N6	1	1/2" 3000# NPT	DIRTY DRAIN

VESSEL DESIGN CONDITIONS			
CODE:	ASME SECTION VIII DIV. 1, 2021 EDITION		
M.A.W.P.:	150 PSI @ 250°F	M.D.M.T.:	-20° F @ 150 PSI
M.A.W.P.:	FV PSI @ 250°F		
CORROSION ALLOWANCE:	N/A	HYDROTEST PRESS:	210 PSI
STAMP:	U, CRN	SERVICE:	UNK. LIQUID, NON-LETHAL
PWHT:	N/A	RADIOGRAPHY:	N/A
MATERIAL:	SS304	GASKET:	BUNA

NOTES:

1. DRY WEIGHT=540 LBS
2. FLOODED WEIGHT=900 LBS
3. SHIPPING WEIGHT=600 LBS
4. VESSEL VOLUME=10.75 CU. FT.
5. VESSEL WILL HOUSE (QTY=7) SIZE 2 SS304 BASKET

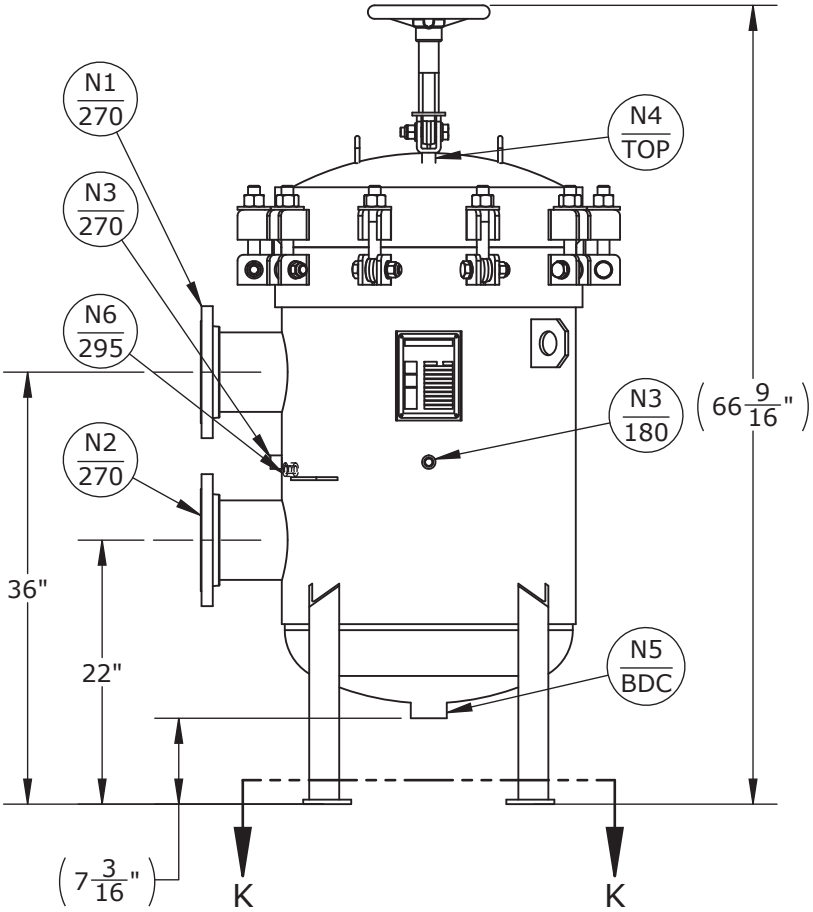

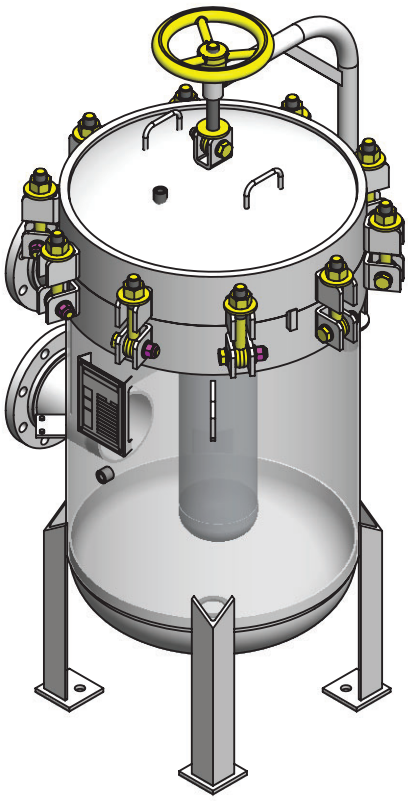

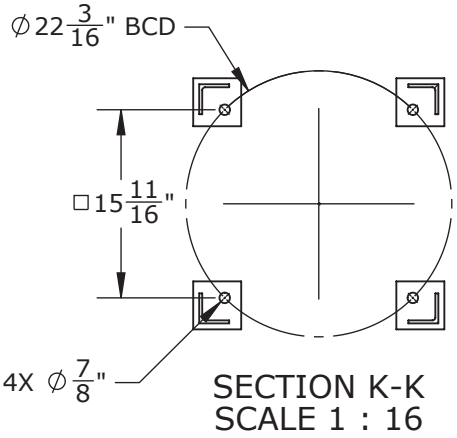

SECTION K-K
SCALE 1 : 16

THIRD ANGLE PROJECTION

TOLERANCES-UNLESS OTHERWISE NOTED
DECIMAL .X =±.1"
.XX =±.02"
.XXX =±.005"
FRACTIONAL =±1/8"
ANGULAR =± 1°
MAX. MACHINED SURFACE FINISH 125

FIL-TREK CORPORATION
55 Stafford Court
Cambridge, Ontario
N1T 1B3
Canada
Phone: (519) 623-7448
Fax: (519) 623-8807
Email: info@fil-trek.com
Website: www.fil-trek.com

THIS DRAWING IS THE PROPERTY OF 'FIL-TREK CORPORATION' AND MUST NOT BE COPIED OR USED IN ANY WAY DETRIMENTAL TO THE CORPORATION

EQUIPMENT: LP SERIES (BAG FILTER VESSEL)
MODEL NO: S4LP24-712-6F-DB-150
CUSTOMER:

PARENT: NONE	DRAWN: NP	DATE: 5/17/2022	SERIAL No.	Part No. 002004-02030, REGISTERED AS 002004-02029	REV. No. 0
	CHK'D: JN	SCALE: NTS			