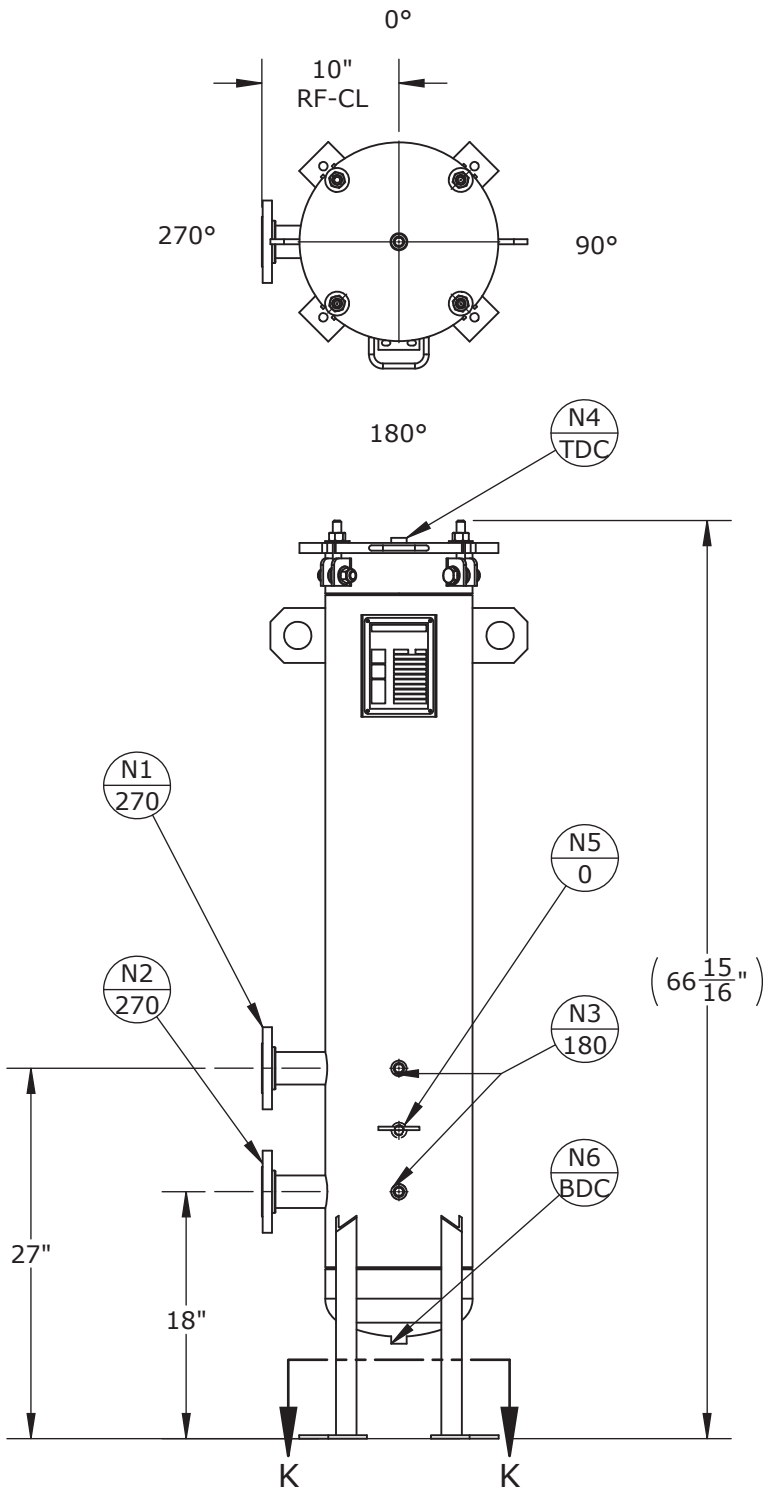

NOZZLE SCHEDULE			
MARK	QTY	SIZE / RATING	DESCRIPTION
N1	1	2" RFSO CL150	INLET
N2	1	2" RFSO CL150	OUTLET
N3	2	1/2" NPT CL3000	PRESSURE GAUGE
N4	1	1/2" NPT CL3000	VENT
N5	1	1/2" NPT CL3000	CLEAN DRAIN
N6	1	1/2" NPT CL3000	DIRTY DRAIN

VESSEL DESIGN CONDITIONS	
CODE: ASME SECTION VIII DIV. 1, 2019 EDITION	
M.A.W.P.: 150 PSI @ 400°F	M.D.M.T.: -20°F @ 150 PSI
M.A.W.P.: FV PSI @ 400°F	HYDROTEST PRESS: 210 PSI
CORROSION ALLOWANCE: N/A	SERVICE: UNK. LIQUID, NON-LETHAL
STAMP: UM	RADIOGRAPHY: N/A
PWHT: N/A	GASKET: ☐BUNA ☐VITON ☐EPDM ☐OTHER:_____
MATERIAL: SS304	
NOTES: DRY WEIGHT: 240 LBS SHIPPING WEIGHT: 280 LBS VOLUME: 2.8 CU. FT. INTERNALS: 10 X 2.5" OD FILTER CARTRIDGES	FACTORY INSTALLED OPTIONS: ☐STAINLESS STEEL BOLTING (SS316) ☐N3 DIFFERENTIAL PRESSURE GAUGE TYPE:_____ ☐N4 PRESSURE RELIEF VALVE TYPE:_____ ☐N4 AIR ELIMINATOR TYPE:_____ ☐N4 VENT VALVE ☐N5/N6 DRAIN VALVES

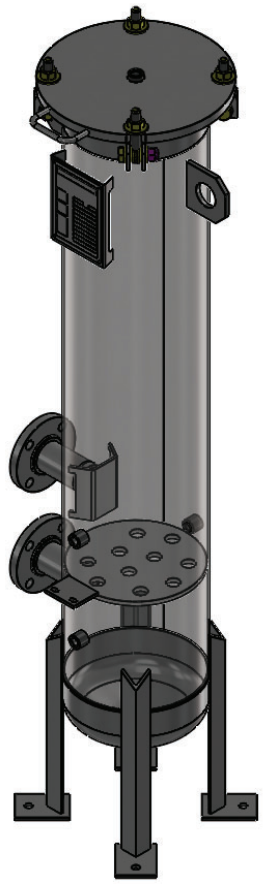

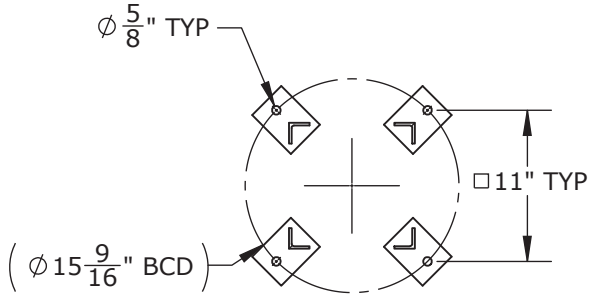

SECTION K-K
SCALE 1 : 14

APPROVED WITH MARK-UPS ☐ APPROVED ☐

THIRD ANGLE PROJECTION

TOLERANCES-UNLESS OTHERWISE NOTED
DECIMAL .X =±.1" .XX =±.02" .XXX =±.005"
FRACTIONAL =±1/8"
ANGULAR =± 1°
MAX. MACHINED SURFACE FINISH 125

FIL-TREK CORPORATION
55 Stafford Court
Cambridge, Ontario
N1T 1B3
Canada
Phone: (519) 623-7448
Fax: (519) 623-8807
Email: info@fil-trek.com
Website: www.fil-trek.com

THIS DRAWING IS THE PROPERTY OF 'FIL-TREK CORPORATION' AND MUST NOT BE COPIED OR USED IN ANY WAY DETRIMENTAL TO THE CORPORATION

EQUIPMENT: GL SERIES (CARTRIDGE FILTER VESSEL)
MODEL NO: S4GL10-010-4-2F-DB-150
CUSTOMER:

VESSEL QUANTITY:	DRAWN: AJ	DATE: 2020-11-06	SERIAL No.	Part No. 001001-01952	REV. No. 0
	CHK'D: TS	SCALE: NTS			