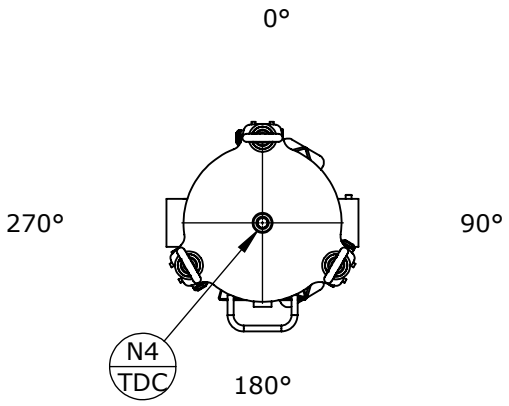

NOZZLE SCHEDULE

MARK	QTY	SIZE / RATING	DESCRIPTION
N1	1	2" NPT CL3000	INLET
N2	1	2" NPT CL3000	OUTLET
N3	2	1/2" NPT CL3000	PRESSURE GAUGE
N4	1	1/2" NPT CL3000	VENT
N5	1	1/2" NPT CL3000	CLEAN DRAIN
N6	0		DIRTY DRAIN

VESSEL DESIGN CONDITIONS

CODE: ASME SECTION VIII DIV. 1, 2019 EDITION	
M.A.W.P.: 270 PSI @ 100°F	M.D.M.T.: -20°F @ 270 PSI
M.A.W.P.: FV PSI @ 100°F	HYDROTEST PRESS: 351 PSI
CORROSION ALLOWANCE: N/A	SERVICE: UNK. LIQUID, NON-LETHAL
STAMP: UM	RADIOGRAPHY: N/A
PWHT: N/A	GASKET: ☐BUNA ☐VITON ☐EPDM ☐OTHER:_____
MATERIAL: SS316	

NOTES:
DRY WEIGHT: 110 LBS
SHIPPING WEIGHT: 140 LBS
VOLUME: 0.75 CU. FT.
INTERNALS: 1 X SIZE 1 BAKSET

FACTORY INSTALLED OPTIONS:
☐STAINLESS STEEL BOLTING (SS316)
☐MESH LINED BASKETS: _____MESH
☐N3 DIFFERENTIAL PRESSURE GAUGE
TYPE:_____
☐N4 PRESSURE RELIEF VALVE
TYPE:_____
☐N4 AIR ELIMINATOR
TYPE:_____
☐N4 VENT VALVE
☐N5/N6 DRAIN VALVES

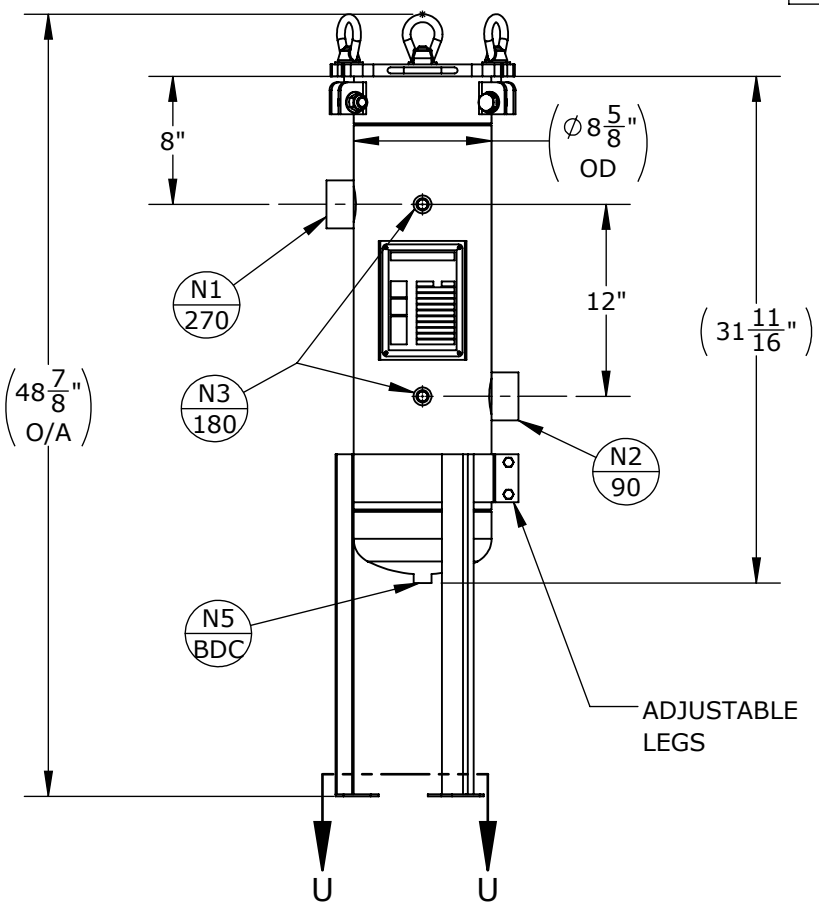

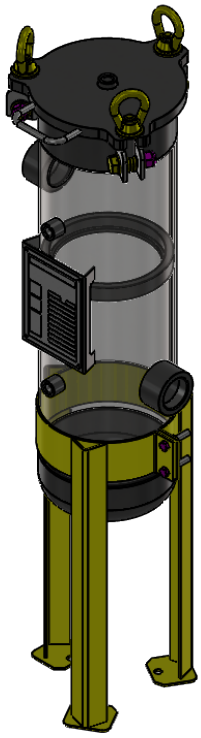

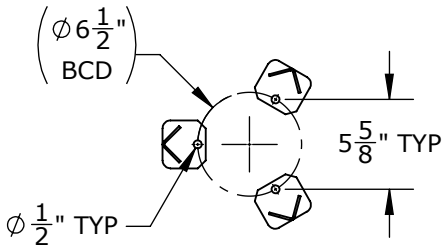

SECTION U-U
SCALE 1 : 12

APPROVED WITH MARK-UPS ☐ APPROVED ☐

THIRD ANGLE PROJECTION

TOLERANCES-UNLESS OTHERWISE NOTED
DECIMAL .X =±.1"
.XX =±.02"
.XXX =±.005"
FRACTIONAL =±1/8"
ANGULAR =± 1°
MAX. MACHINED SURFACE FINISH 125

FIL-TREK CORPORATION
55 Stafford Court
Cambridge, Ontario
N1T 1B3
Canada
Phone: (519) 623-7448
Fax: (519) 623-8807
Email: info@fil-trek.com
Website: www.fil-trek.com

THIS DRAWING IS THE PROPERTY OF 'FIL-TREK CORPORATION' AND MUST NOT BE COPIED OR USED IN ANY WAY DETRIMENTAL TO THE CORPORATION

EQUIPMENT: SL SERIES (BAG FILTER HOURSING)
MODEL NO: S6SL111-2P-A-270
CUSTOMER:

VESSEL QUANTITY:	DRAWN: CL	DATE: 2020-03-05	SERIAL No.	Part No. 002002-00729	REV. No. 0
	CHK'D: AJ	SCALE: NTS			